Boltzmann Transport Eqn

PH671 - Transport

UMKLAPP and NORMAL PROCESSES:

"Normal" phonon collisions that conserve *k*-momentum (crystal momentum) do not limit thermal conductivity (N-processes), but "Umklapp processes" (U-processes) limit thermal conductivity. This is because the medium is discrete, and k-values outside the 1st BZB can be mapped back into the 1st BZB with a reciprocal lattice vector. Notice that two phonons with $k_x > 0$ collide to produce a phonon with $k_x < 0$!

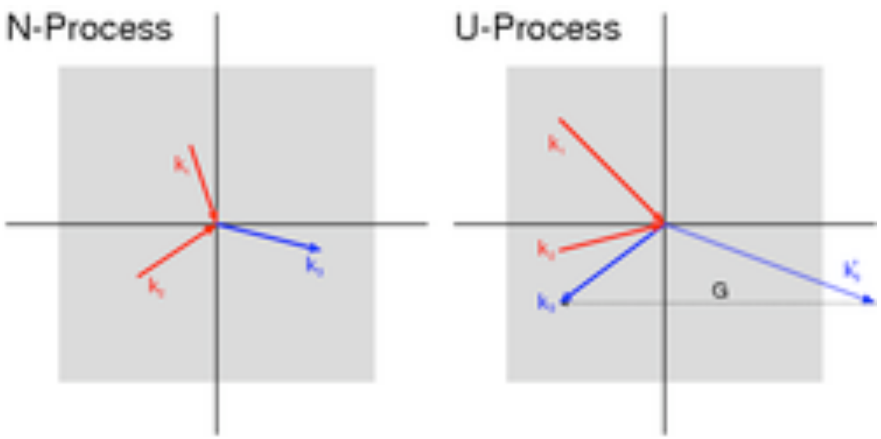

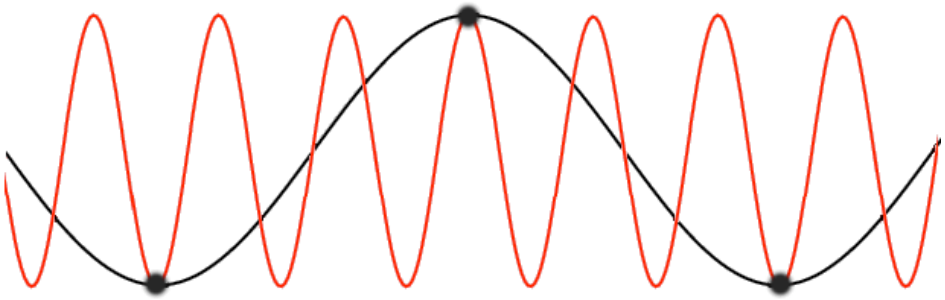

http://en.wikipedia.org/wiki/Umklapp_scattering

ELECTRON-PHONON SCATTERING IN METALS:

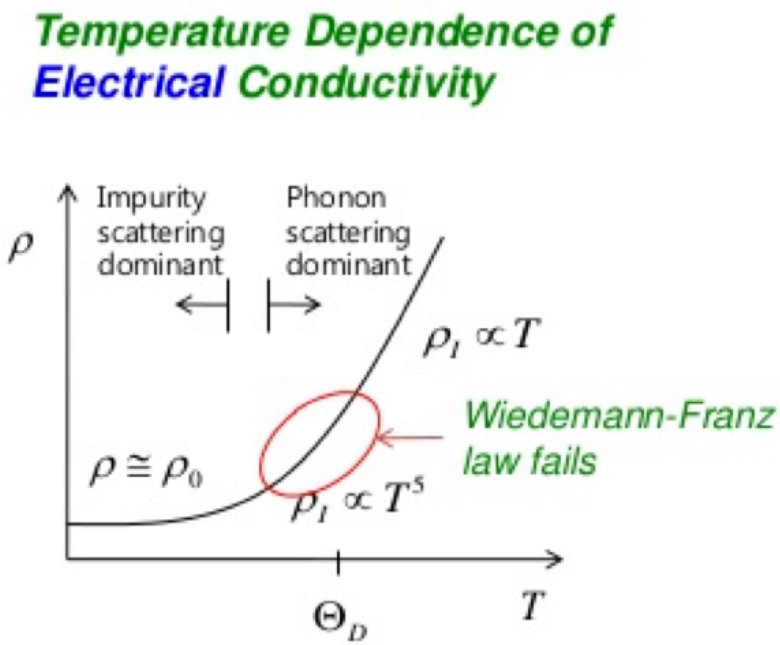

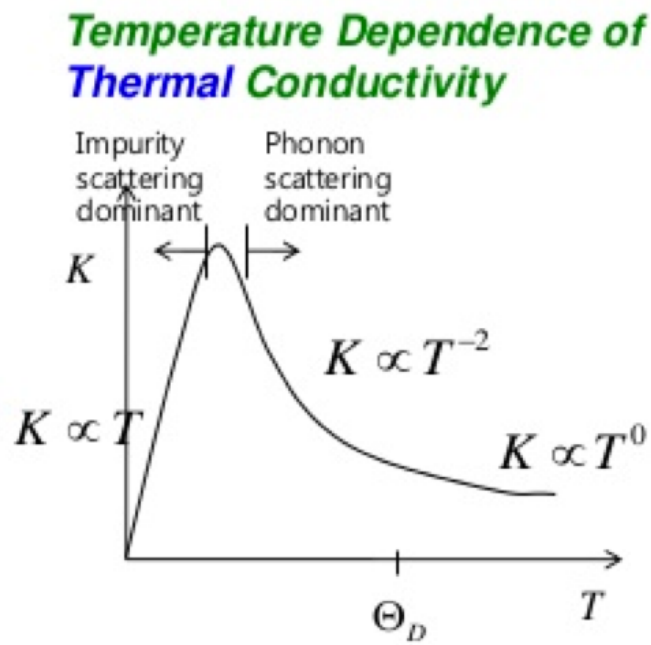

ELECTRON-PHONON SCATTERING IN METALS:

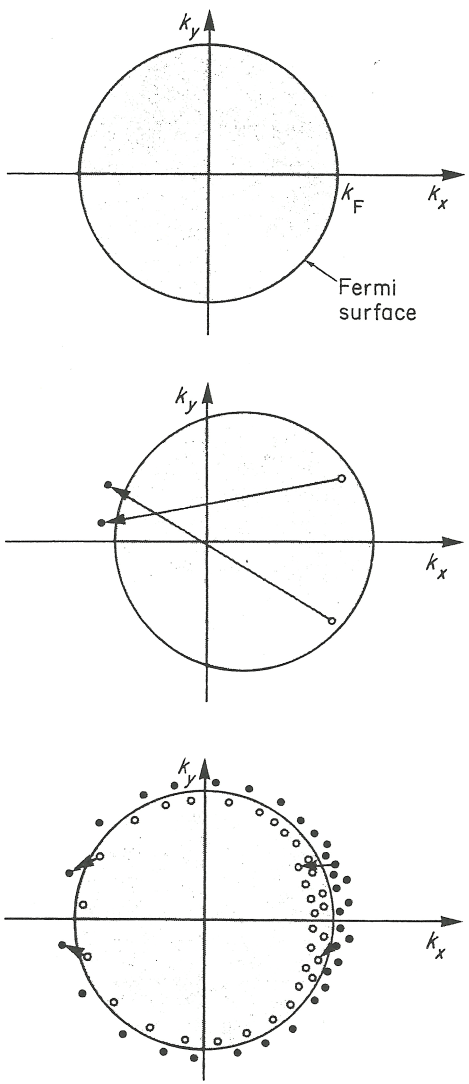

ELECTRON-PHONON SCATTERING:
(Ashcroft ch. 26)

Thermal conductivity of metals constant at high temperature.

At high $T >> \theta_D$, all phonon modes excited. # of phonons in normal mode is

$$n_{ph}(q) = \frac{1}{e^{\hbar\omega/k_B T} - 1} \xrightarrow[T->\infty]{} \frac{1}{\hbar\omega / k_B T} = \frac{k_B T}{\hbar\omega}; \quad \tau_{e-ph} \propto \frac{1}{n_{ph}} \sim \frac{1}{T}$$

$$\kappa = \frac{c_v \tau_{e-ph}}{3} \sim const$$

Thermal conductivity of metals varies as T^{-2} at int temperature.

(1) Energy of phonons must be hw ≈ $k_B T$ *and* $w=cq$; so q≈T

(2) surface of allowed phonons scales as T^2

(3) El-Ph coupling constant scales as T

(4) (1-3) say $\tau \approx T^{-3}$

(5) Cv goes as T

$$\kappa = \frac{c_v \tau_{e=ph}}{3} \sim \frac{T}{T^3} \sim T^{-2}$$

Thermal conductivity of metals varies as T at v. low temperature

(1) $\tau \approx T^0$ *impurity scattering is temp indep*

$$\kappa = \frac{c_v \tau_{imp}}{3} \sim T$$

ELECTRON-PHONON SCATTERING:
(Ashcroft ch. 26)

Resistivity of metals varies as *T* at high temperature.

At high $T >> \theta_D$, all phonon modes excited. # of phonons in normal mode is

$$n_{ph}(q) = \frac{1}{e^{\hbar\omega/k_B T} - 1} \xrightarrow[T->\infty]{} \frac{1}{\hbar\omega / k_B T} = \frac{k_B T}{\hbar\omega}; \quad \tau_{e-ph} \propto \frac{1}{n_{ph}} \sim \frac{1}{T}$$

$$\rho = \frac{m^*}{n_e e^2 \tau_{e-ph}} \sim T$$

Resistivity of metals varies as T^5 at int temperature.

(1) Energy of phonons must be hw ≈ $k_B T$ *and* $w=cq$; so q≈T

(2) surface of allowed phonons scales as T^2

(3) El-Ph coupling constant scales as *T*

(4) (1-3) say $\tau \approx T^{-3}$

(5) Forward scattering dominates ≈ T^2 (see next slide)

Resistivity of metals is constant at very lowest temperature.

(1) Impurity scattering, boundary scattering is independent of temperature

(2) Other things can come in too – e-e scattering, for example

ELECTRON-PHONON SCATTERING IN METALS:

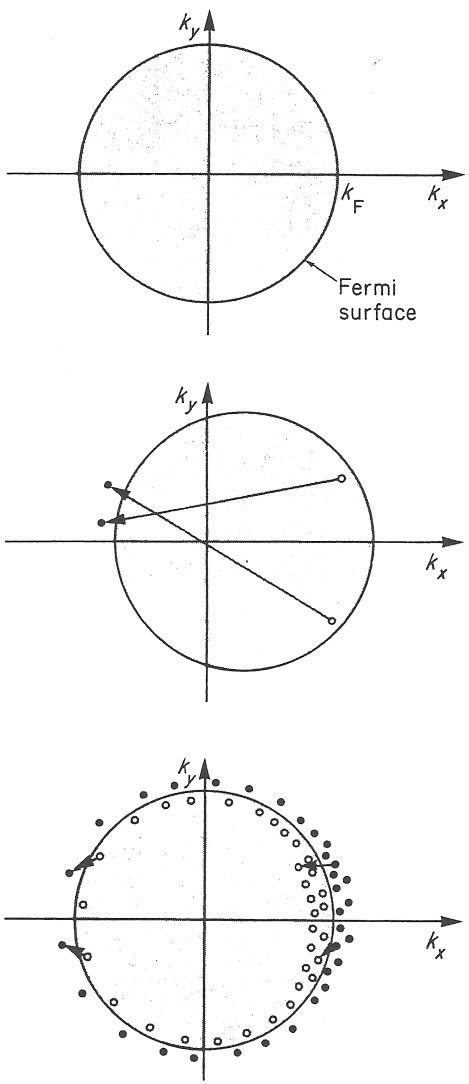

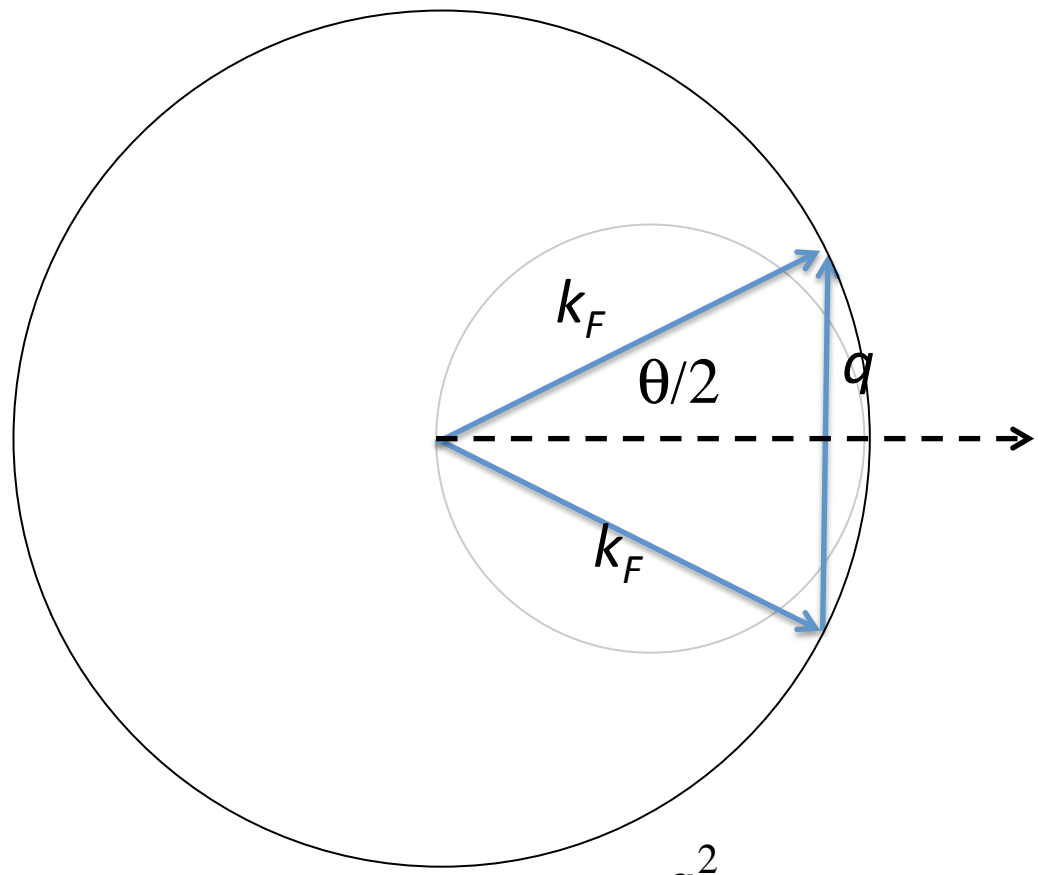

$$1-\cos\theta = \frac{q^2}{2k_F} \sim T^2$$

ELECTRON-PHONON SCATTERING IN METALS:
(Hook)
Wiedemann-Franz Law.

$$\frac{\kappa_{thermal}}{\sigma_{electrical}T} = \frac{\pi^2}{3}\left(\frac{k_B}{e}\right)^2 \sim const = 10^{-8} W\Omega K^{-2}$$

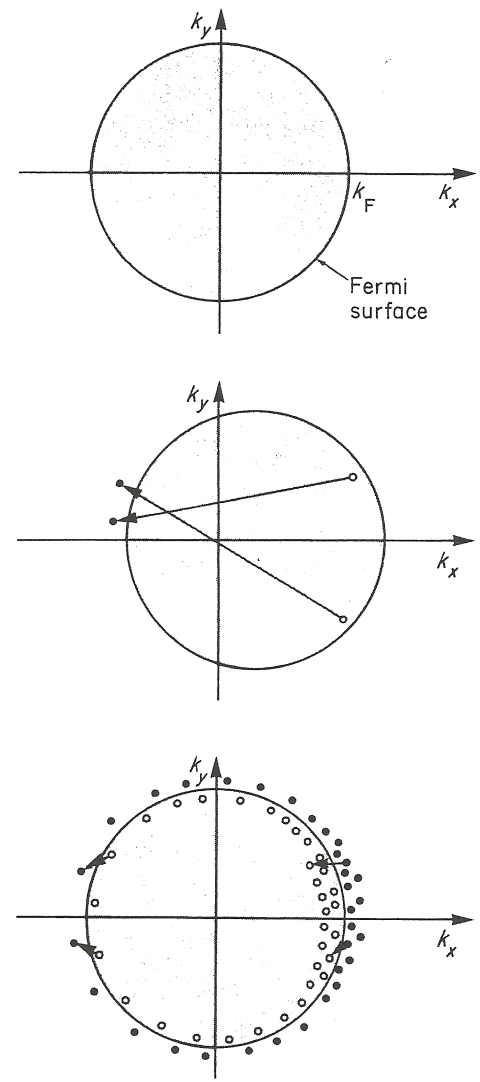

$$\kappa_{thermal} = \frac{\pi^2}{3}\frac{nk_B{}^2\tau}{m^*}T; \quad \sigma_{electrical} = \frac{ne^2\tau}{m^*}$$

But scattering can be different!

(1) At lowest T, impurity scattering dominates: τ same for both – WF OK
(2) Low *T* – more phonon mechanisms for thermal relaxation: WF violated
(3) High *T* – same phonon mechanisms again – WF OK

Matthiessens's Rule (schematic)

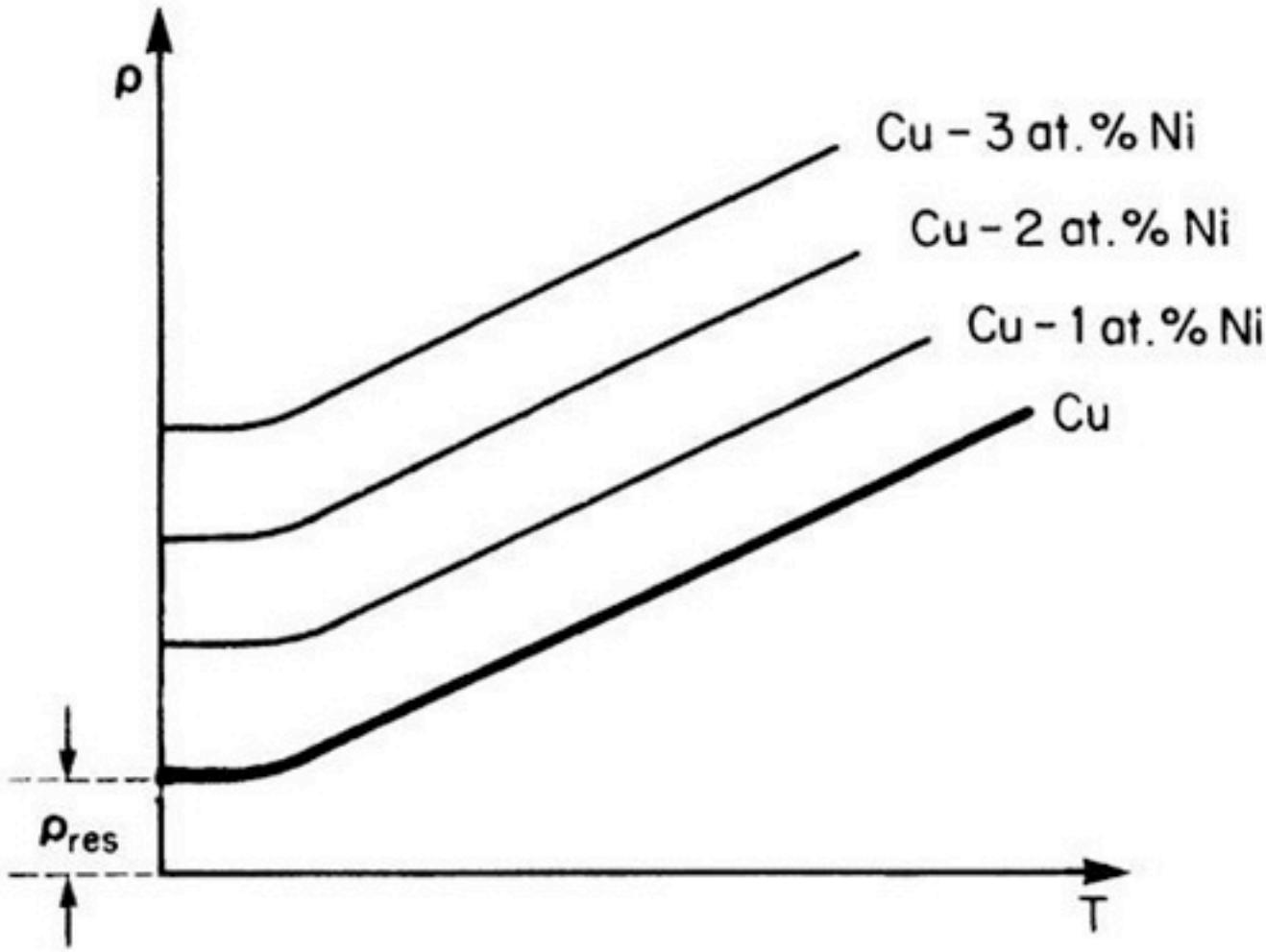

Nordheim's Rule (schematic)