Understanding Radio for the Practical Engineer

USA Edition

Mike Wilson C.Eng. MIEE

Introduction

A Practical Guide to the Principles of Radio Design.

There are many books on the subject of radio design, but the majority of them are either too basic and do not really give enough information, or they immediately launch into advanced theory that, unless you are a math genius, is just confusing and unhelpful.

How often have you searched for information in a reference book and found that the relevant section opens with something like:

"It may be shown that…blah, blah {*some huge and very complicated mathematical calculation*}"?

Do your eyes start to glaze over and you rapidly lose interest? Sometimes there are several pages of it. Undoubtedly it is technically correct, but if you have a problem to solve, you are not interested in the derivation of theory; all you want is the **answer**.
Sometimes, a friend or colleague is able to explain in a few simple words what the reference book was unable to put across.
If this sounds familiar, then I hope that this book will help.

Of course some basic math is mandatory in engineering and, where this is appropriate, I shall quote the relevant formulae and expressions - but only in their final practical form as engineering tools. Let the academics concern themselves with theory.

This is not intended to be a complete reference manual for RF design - the library shelves are, in any case, filled with reference books and these necessarily include all of the 'theory' that I am anxious to avoid. Rather, it is an attempt to fill in some of the 'gray' areas that cause difficulties for many young engineers today.

It has been my privilege to work with some of the best engineers in the field of RF design, but I have also found many who showed a lamentable lack of knowledge. In my view, this is to a large extent because nobody is prepared to teach them, nor to give them time to learn for themselves. Modern commercial pressures dictate that only a limited time is allowed on each project and the important areas of design are carried out by those who already have experience in that field. Naturally, this makes sense to the project managers, but it means that the less skilled engineer will never get the chance to learn. It also means that there is a tendency for engineers to become 'experts' in a particular and often very specialized field, without ever being given the chance to develop their skills in other areas. It is most unfortunate for them if that expertise becomes obsolete.

CAD is now considered to be an essential design tool in the electronics industry, but it is no substitute for basic understanding and knowledge. It may tell you if your design will work, but not if it was an appropriate choice in the first place, nor how to properly test and debug your finished design.

Of course, a book cannot impart practical experience either. What I have attempted to do is to give a clear and concise description of the various circuit blocks, with an explanation of how to plan your design and select the most suitable devices. Each part will contain a section on test and measurement techniques and, where appropriate, I have included some **frequently asked questions** and a number of **useful tips**.

The book is divided into three parts, as follows:

Part 1	Page
The Receiver Front End	
Contents	4
Receiver Noise	5
Antennas	6
Front-end Filters	7
The LNA	12
Bias circuits, decoupling and layout	23
Measurement techniques	26
Part 2	
Mixers, Local Oscillators and the IF	
Contents	29
Mixers	30
The Local Oscillator	33
The Phase Locked Loop	39
IF Filters	46
IF Amplifiers	49
Direct Conversion	53
Measurement techniques	54
Part 3	
Transmitters & Modulation Techniques	
Contents	56
Propagation	57
Modulation	58
VCO's	63
Frequency Multipliers	64
Up Converters	64
Driver Stages	65
The Power Amplifier	66
Linearity Techniques and Spectral Purity	70
PIN Switches	74
Isolators and Circulators	75
Directional Coupler	76
Power Supply management	78
Measurement techniques	79
Appendices	83

About the author: Mike Wilson. C.Eng. MIEE.

I have had more than 30 years experience as an RF design engineer, the last 10 years as an RF Design Specialist working on new designs. I have worked for some of the leading companies in the field of communications, including Nokia and Panasonic, as well as a number of the smaller companies. My expertise has included the design of low-noise amplifiers, phase-locked loops, transmitters and linear amplifiers for CDMA applications. I have also had a great deal of experience in practical problem solving at board level and have frequently been able to identify and offer solutions to problems where others have failed.

This book has been written to fulfill a wish to pass on some of this knowledge to others.

Mike Wilson - Copyright 2006.

Understanding Radio for the Practical Engineer

Part One

By Mike Wilson, C.Eng. MIEE.
Copyright 2006.

Contents:

Receiver Noise	**5**
Antennas	**6**
Front-end Filters	**7**
The PIN switch	**7**
The Dielectric Resonator Filter	**8**
The Helical Resonator Filter	**9**
L-C Filters	**9**
Microstripline Filters	**10**
The Duplexer/Diplexer Filter	**10**
Coaxial Cavity Filters	**11**
The LNA	**12**
LNA Design	**12**
Optimum Noise match.	**15**
Stability Factor	**16**
Third-order Intercept Point. (IP3).	**18**
Practical LNA	**20**
Balanced LNA.	**21**
Bias circuits, decoupling and layout	**23**
Simple bias	**23**
Active bias	**23**
Decoupling and layout	**24**
Measurement techniques	**26**

The Receiver Front End

1.1. Receiver Noise

At frequencies below 30MHz, noise is predominantly atmospheric and environmental. The noise contribution from the first amplifier stage is therefore relatively unimportant. As the frequency reaches the VHF and UHF bands however, the first amplifier and any preceding filters become the dominant noise source in the receiver chain. If we consider an ideal 'noise-free' receiver, then the absolute sensitivity is limited by the theoretical noise-floor. This is determined by the expression $P_n = kTB$ (where k is Boltzmann's constant, T is temperature in degrees Kelvin and B is the system bandwidth) and, at a normal ambient temperature of 17°C, approximates to -174dBm in a 1Hz bandwidth.

Absolute noise floor at 17°C = **-174dBm/Hz**

From the above expression, it may be seen that the absolute noise floor of any receiver system is defined by the final signal bandwidth (i.e. system bandwidth at the demodulator). Also, in any practical receiver, the receiver itself will add to the noise and its **Noise Figure** must be added directly to the above figure. Noise Figure is defined as:

Noise Figure (NF) = 10 x log [S/N ratio at the input / S/N ratio at the output].

For a complete receiver system, this is more usefully defined as:

Noise Figure (NF) = (actual S/N dB at the output - S/N dB for a noise-free receiver). [Equ. 1]

If we consider the fact that a 3dB noise figure equates to a 30% loss in maximum line-of-sight range, it may readily be seen that it is very important to keep the receiver noise figure to an absolute minimum.

The overall performance of a receiver system is usually defined by its *minimum detectable signal*, or 'Mds' and is this is given by the following expression:

Mds = -174 + NF + 10 (log BW), where BW is system bandwidth in Hz. [Equ. 2]

Hence, to calculate the Mds for a given receiver, see the following example:

A receiver has a system bandwidth of 200kHz and a noise figure of 5dB. From equation 2 above:

Mds = -174 + 5 + 10 (log of 200,000) = -174 + 5 + 53 = **-116dBm**.

Note that this is not the same as the receiver sensitivity. In any practical system, the demodulator requires a minimum signal/noise ratio. In an analogue system, this signal/noise is generally expressed as SINAD (Signal/Noise and Distortion) and is typically about 12dB, but for digital systems it is more usually defined as carrier/noise ratio (C/N) and is typically about 9dB.
In the above example, the sensitivity of a practical (digital) receiver is therefore given by:

Receiver sensitivity = -116 + 9 = **-107dBm**.

1.2. Antennas.

Antenna design is a highly specialized field that is of limited interest, except to those who work in it. However, a section on receiver front-ends cannot be entirely complete without some mention of antennas. I shall therefore restrict this discussion to VHF/UHF antennas, where the dimensions are comparable to a half or quarter wavelength at the frequency of operation and the matching impedance is (usually) 50Ω.

For ideal (line-of-sight) propagation, the range versus transmitter power follows an inverse square law. This means that in order to double the effective range, the transmitter power must increase by a factor of four. Another factor to be considered is that the free-space path loss increases with the operating frequency and hence, for a given transmitter power, the maximum range is limited by the absolute receiver sensitivity. For fixed installations, the range can be significantly improved by the use of a high-gain directional antenna.

The **natural** impedance of a half-wave dipole is approximately 75Ω. Historically, the impedance used for domestic TV receivers and VHF broadcast radio has always been 75Ω, which conveniently matches to a dipole. This means that a quarter-wave monopole would have an impedance of 37.5Ω. In fact, because the preferred working impedance is 50Ω, a monopole antenna is deliberately made electrically shorter than λ/4 to increase its impedance.

Antenna gain is generally measured in terms of 'dBi', which means the relative gain (in dB) over an **isotropic radiator** (i.e. a radiator having a uniform field in both the horizontal and vertical planes). For example, a quarter-wave monopole antenna with a ground plane has a gain of about 2.5dBi, whereas a multiple element UHF 'Yagi' type antenna can have a forward gain of more than 18dBi. This extra gain is **free** - that is it consumes no power and contributes no additional noise, the only penalty being in the size and complexity of the antenna.

Fixed installations frequently use co-linear antennas (effectively, several resonant elements connected in series to increase gain), or phased arrays. The latter, as the name implies, comprises a number of separate antennas, each driven in phase by using carefully adjusted lengths of transmission line. The great benefit of the phased array is that its polar diagram can be 'steered' by adjusting the relative phase of the driven elements, changing its properties between omni-directional and directional. For higher frequencies, the entire phased array can be constructed on a single printed-circuit board using 'patch' antennas and with microstripline elements providing the required phase shifts. Using these techniques, it is possible to achieve antenna gains of more than 23dBi.

For mobile systems, where omni-directional properties are required, it is rare to achieve an antenna gain of more than 5dBi and, for small hand-held equipment such as mobile 'phones, the gain can be less than unity.

Fig. 1.1.
A double 'Yagi' antenna for 1.27GHz.
This antenna has a forward gain of 21dBi.

1.3. Front-end Filters.

A hand-held device will almost invariably be a transceiver; that is to say that it must be capable of transmitting and receiving with the same (integral) antenna. This also applies to most vehicle-mounted (PMR) equipment. For fixed installations it may be possible to have separate antennas, but if these are co-sited (i.e. in close physical proximity to one another), it will still be necessary to prevent the transmitter signal from swamping the receiver.

In all of these cases, some form of switching and/or filtering will be necessary between the antenna and the transmit/receive paths. This switch/filter will have an insertion loss and, because it must come before any amplifier stage, it will directly add to the noise figure of the receiver.

The mode of operation may be either:

- **Simplex** – the same frequency is used for both transmit and receive functions. These cannot take place simultaneously, but are sequential by means of a press-to-talk or a voice-activated switch. Connection to the antenna will usually be via a PIN switch (or relay) and a band-pass filter.
- **Diplex** – transmit and receive functions are simultaneous, using different frequencies and with filters to separate transmitter and receiver paths.
  * There is some confusion about the distinction between 'duplexers' and 'diplexers'. I prefer to define them in the way given here, but others may disagree.
- **Duplex** – this is a combination of simplex and diplex, specifically suited to digital modulation systems such as TDMA, where transmit and receive functions are confined to sequential time slots, but are also at different frequencies and are switched continuously at a rapid rate. The modulation is time-compressed during transmission and time-expanded on reception to give effective continuous duplex operation.

In making a decision on what type of filter is best for your application, you will need to consider the following factors:

a). What is the operating frequency of your receiver? This will limit the choices available to you.
b). Is it a frequency band that is already widely used? There are many inexpensive off-the-shelf dielectric resonator filters and diplexers for the popular frequency bands.
c). Is physical size an important consideration? Dependent on your operating frequency, this will limit your choices.
d). Will the receiver be required to operate in an environment where there are high level out-of-band signals? In a duplex system, the duplexer/diplexer acts as a filter and any additional filter is best placed after the first amplifier stage (LNA). Remember that any insertion loss at the input will directly add to your noise figure.

The various types of input filters/duplexers are described below:

1.3.1. The PIN switch.

In portable HF radios, the antenna will be much shorter than $\lambda/4$ and therefore a high impedance. In order to produce the same transmitter power, an impedance transformer is used to match the antenna, producing a much higher RF voltage. At frequencies below 5MHz, this RF voltage can be several kilovolts and here the relay reigns supreme. For VHF/UHF equipment, the PIN switch has generally replaced the transmit/receive relay, due to its much smaller size. PIN switches are most commonly found in simplex systems (i.e. where transmit and receive functions do not occur simultaneously).
A good PIN switch should have an insertion loss of typically less than 0.5dB.
PIN switches will be discussed in further detail in Part Three of this book.

1.3.2. The Dielectric Resonator Filter.

At frequencies in the 800MHz to 3GHz region the most common type of filter is the ceramic dielectric resonator type, due to its compact size and relatively high 'Q'. This type of filter usually comprises three or four edge-coupled resonators to give a band-pass response with low ripple in the pass-band. As with any filter, the number of elements (poles) determines the steepness of the skirts and the degree of out-of-band rejection, but more poles inevitably means greater insertion loss. For a front-end filter, the insertion loss will typically be in the range 2 -3dB, with the aim to keep this as low as possible.

Below 800MHz the physical length of the resonators becomes rather large and they therefore become less attractive. Conversely, at frequencies beyond 3GHz, the very short physical length makes their construction impractical.

The response of typical dielectric resonator filter is shown in Fig. 1.2. below, with an actual filter shown in Fig. 1.3.

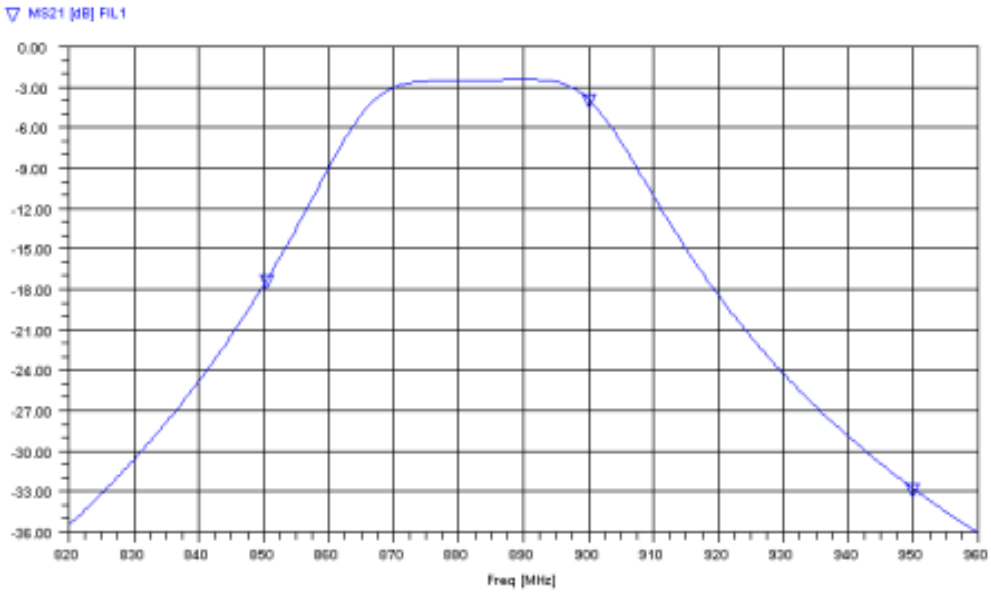

Fig. 1.2.
Response of a typical 3-pole Dielectric Resonator Filter.

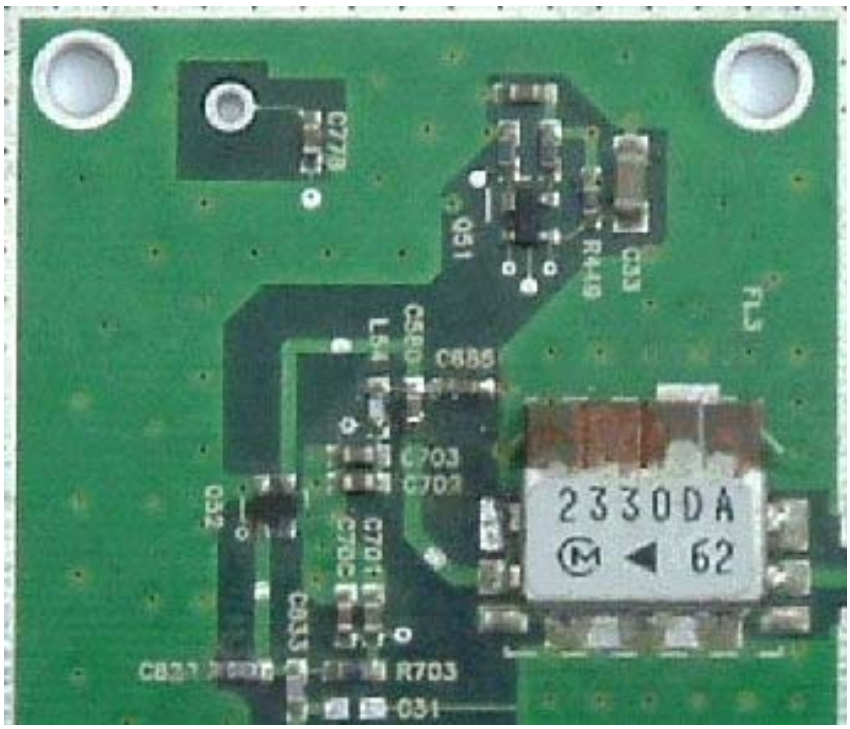

Fig. 1.3.
A 4-pole Dielectric Resonator Filter for 2.4GHz, mounted on a pcb.

1.3.3. The Helical Resonator Filter.

Another type of filter that can be useful in the 200MHz to 1GHz range is the helical resonator type. This comprises an open-ended coil (or helix) inside an enclosed air cavity and is edge-coupled to the next cavity through a slot in the case wall. Usually this type offers a limited range of adjustment, by means of a metal screw core. At the lower frequencies, this can be smaller and cheaper than a comparable dielectric resonator type but, due to the decreasing physical dimensions, is impractical above about 1.5GHz. Insertion loss is higher than a comparable dielectric resonator type.

A typical 3-pole surface-mount filter is shown in Fig. 1.4. below.

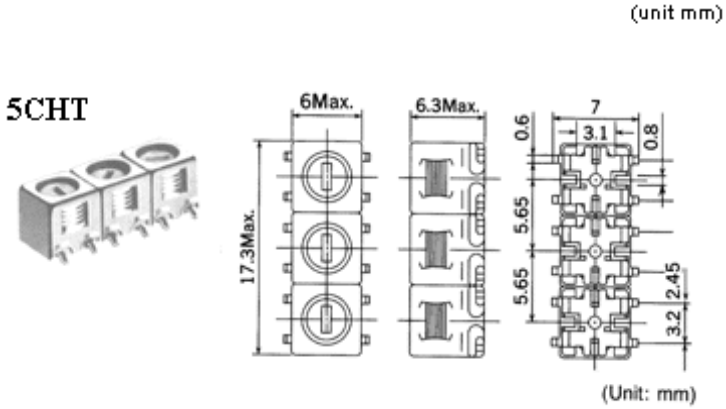

Fig. 1.4.
A 3-pole surface-mount Helical Filter in the 5CHT range by Toko.
Available range 395 - 510MHz .

1.3.4. L-C Filters.

Below 400MHz it is more likely that a conventional L-C filter will be used at the input. As the frequency is reduced below 200MHz, the noise figure becomes less significant by comparison with interference and environmental noise and so higher losses at the input may be tolerated.

For fixed frequency applications, a simple band-pass filter as shown in Fig. 1.5. may be used. For a repeatable design, 5% inductors and 2% capacitors are required. If the receiver is to operate over a wide range of frequencies, all or part of the tuning capacitors could be replaced by varicap tuning diodes.

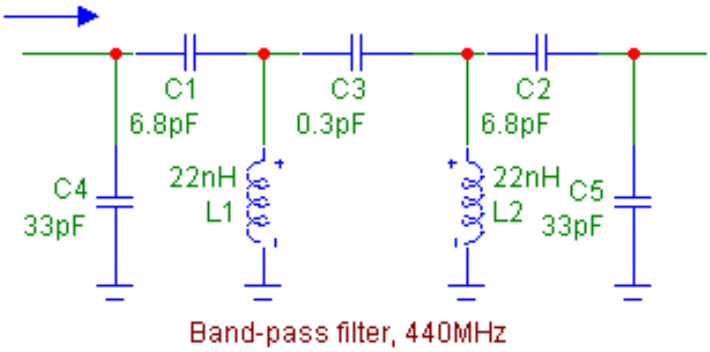

Fig. 1.5.
Schematic of a typical 2-pole Band-Pass Filter for 440MHz.

More complex filters with up to 4-poles may be required for certain applications such as PMR sets. This type of equipment needs to operate in a high RF noise environment and here sensitivity is traded for selectivity.

1.3.5. Microstripline Filters.

It is also possible to design filters using microstrip lines, but below about 3GHz these will occupy a large board area and, on FR4 substrate material, the 'Q' will be low with a high insertion loss. Beyond 3GHz, it becomes mandatory to use a superior substrate material such as Teflon or Alumina. This is fortunate because, as previously described, most other types of filter cease to be viable at these frequencies. As it becomes more difficult to meet the gain and noise figure requirements, the filter is usually placed after the LNA, leaving the input broadband. For fixed installations, such as a satellite TV receiver, the antenna itself is frequency selective and limits the out-of-band response.

1.3.6. The Duplexer/Diplexer Filter.

For a duplexer (or diplexer), it is common to combine the filters for receive and transmit paths in a single integrated block. This can be a low-pass and a high-pass filter, with a crossover point midway between the transmit and receive frequencies, or it may be a band-pass filter on the receiver side with a band-stop (notch) at receiver frequency on the transmit side.

Two dielectric resonator type duplexers are shown in Figures 1.6. and 1.7. below.

CERAMIC DUPLEXER FOR W-CDMA

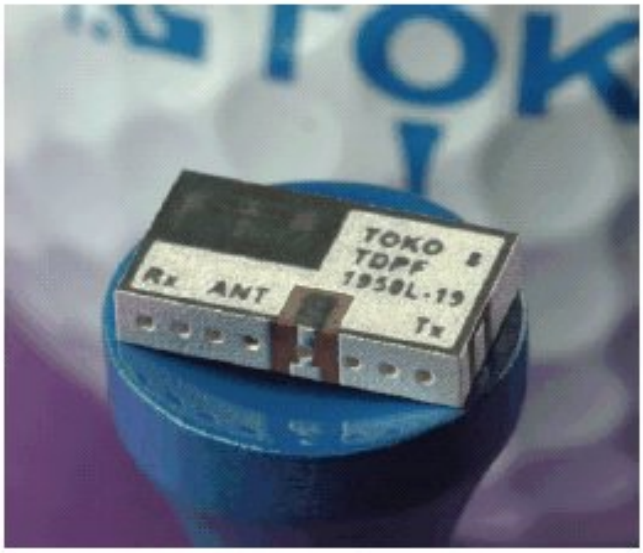

Fig. 1.6.
An extremely compact Duplexer from Toko for the 2GHz band , shown on a golf tee for size comparison.

Fig. 1.7.
A 900MHz high power (10W) Duplexer from TDK.
This has a total of 11 resonators elements, 5 in the transmit path and 6 in the receiver path.

1.3.7. Coaxial Cavity Filters.

For base-stations and other applications where a very high performance is required, the coaxial cavity filter can handle high RF power, gives a much higher 'Q' with lower insertion loss and has good out-of-band rejection, but is physically large and very expensive. A duplexer filter will probably have four or more cavities (poles) on each side, with adjustment screws for fine tuning (see Fig. 1.8).

A typical filter of this type is milled from a solid brass block and then silver-plated for low RF loss. Adjustment screws allow precise adjustment for an optimally flat response and minimum loss in the pass-band. The filter response will be carefully trimmed by a skilled engineer, using a network analyzer and, once set, the adjustment screws are locked in place.

Fig. 1.8.
A cavity duplexer for the 900MHz GSM band. This filter has an insertion loss of less than 0.7dB and better than 40dB isolation.

1.3.8. Waveguide Filters.

The waveguide filter is really an extension of the cavity filter, but specifically applied to frequencies above 5GHz where the cavities become very small. As with the cavity filter, these are very expensive and would only be used for highly specialized applications. It has been included here only to complete the list of filter types.

Fig. 1.9.
A typical waveguide filter for rectangular waveguide.

1.3.9. SAW (Surface Acoustic Wave) Filters.

SAW filters are now being used in the front-end of GSM and WCDMA systems and will be covered in Part Two, under IF filters.

1.4. The LNA (Low Noise Amplifier).

The LNA is the first amplifier device in the receiver chain and, as the name implies, its function is to amplify the incoming signal to a level that is well above the noise threshold of subsequent stages, without significantly adding to that noise itself.
As described in Section 1.3, the passive circuits at the input directly add to the overall noise figure and it is very important to keep these losses to an absolute minimum.

1.4.1. LNA Design.

A good LNA design should meet the following requirements:

- High gain (>15dB).
- Low noise figure (<2dB).
- Unconditionally stable.
- Good input return loss (<10dB).
- High third-order intercept point *(see section 1.4.4.)

In addition, for use in a hand set, the following are also important:

- Low supply voltage (<3V).
- Low current consumption (<10mA).
- Small footprint.
- Low cost.

Unfortunately, these are not always mutually compatible and a good design must balance the trade-offs against the requirements for the particular application.
When considering the design of an LNA, it is first necessary to choose the active device. For a hand-set, this will probably be a bipolar transistor, although other types are available. Suitable devices are clearly labeled 'low-noise' in the manufacturer's data sheets . However, it is necessary to look beyond this - the device must also meet other important criteria, as listed above.

Suitable devices fall into 3 main categories:

1. Bipolar transistor. Examples: HBFP-0420, BFP420, BFG425W
2. FET/PHEMT (pseudomorphic high-electron-mobility transistor). Examples: ATF34143, CFH800
3. MMIC (monolithic microwave integrated circuit). Examples: MGA-53543, CF750

Generally, the PHEMT (there are variations on this, such as e-HEMT) devices have a lower noise figure and higher gain than bipolar types, but at the expense of higher current. Most, but not all, also need a negative bias supply. MMIC's can offer a quick and convenient solution, requiring little or no design effort for a predictable result, but they are invariably more expensive than discrete types.
The manufacturer's data sheet will indicate the optimum operating voltage and current to give the specified noise figure (see Fig.1.10 on the following page), but it will be necessary to make certain trade-offs. The MGA-53543 MMIC offered by Agilent is suggested for WCDMA applications, but at 5V and 53mA, it is unlikely to be seriously considered as the LNA in battery powered equipment. True, this device has a really excellent IP3, but the trade-off is too great. For mains-powered or vehicle-mounted equipment, current is less likely to be an issue, but cost may be important.

FAQ 1. What topology should I use for my LNA – bipolar, FET/PHEMT or MMIC?

This will depend on cost and power supply considerations, as well as the application. FET/PHEMT devices usually have a lower noise figure and higher IP3, but are more expensive and may require a negative supply for the bias circuitry. MMIC's require very little design effort, but are usually the most expensive solution. Some MMIC's offer additional functionality in the same package (e.g. LNA + mixer or two LNA stages), which may be an attractive option.

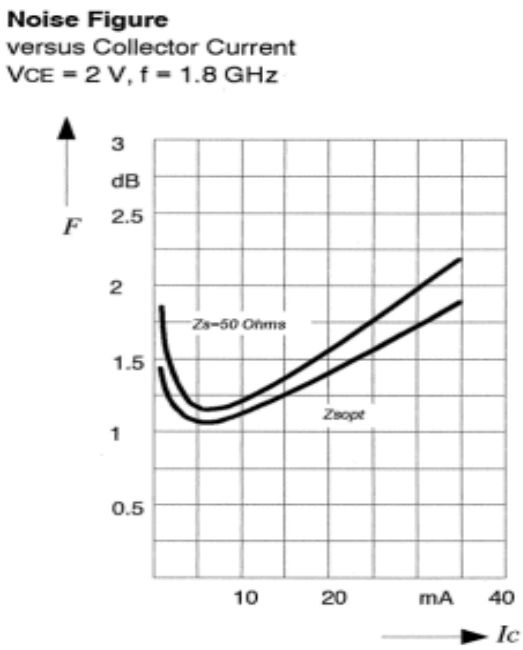

Fig. 1.10.
Typical noise figure plot for a low-noise bipolar transistor (Infineon BFP420).

In a good design, the LNA and input circuits should be the dominant factor in the overall noise figure of the receiver. In order to achieve this, the gain of the LNA device needs to be as high as possible The gain budget diagrams in Figs 1.11 and 1.12 below, illustrate this point. The input duplexer filter has a fixed loss of 3dB before the LNA, which itself has a noise figure of 1.5dB. The overall noise figure for the LNA is therefore 4.5dB. In a typical receiver architecture, this might be followed by a band-pass filter, a mixer and an IF filter with a combined insertion loss of 12dB, before reaching the first IF gain stage, in this case with 26dB gain and a 2dB noise figure.

Fig. 1.11.
Gain budget diagram with **20dB** LNA gain, showing overall noise figure of **5.18dB**

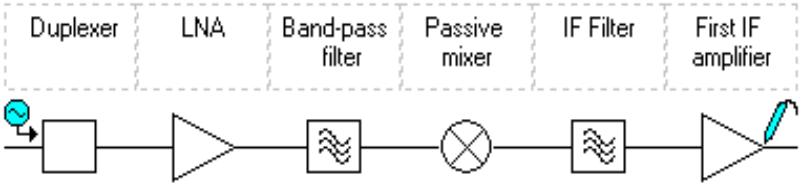

	Duplexer	LNA	Band-pass filter	Passive mixer	IF Filter	First IF amplifier	Cascade Total
NF (dB)	3	1.5	3	6	3	2	5.18
Gain (dB)	-3	20	-3	-6	-3	26	31.00
OIP3 (dBm)	100	25	100	20	100	20	19.92

Fig. 1.12.
Gain budget diagram with **12dB** LNA gain, showing overall noise figure of **7.68dB**

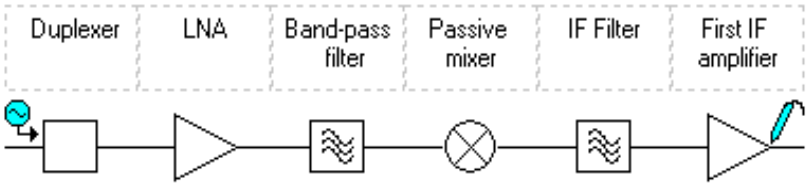

	Duplexer	LNA	Band-pass filter	Passive mixer	IF Filter	First IF amplifier	Cascade Total
NF (dB)	3	1.5	3	6	3	2	7.68
Gain (dB)	-3	12	-3	-6	-3	26	23.00
OIP3 (dBm)	100	25	100	20	100	20	19.92

Note that in Fig. 1.11 the LNA has a gain of 20dB and the overall degradation in noise figure is only 0.68dB (from 4.5dB to 5.18dB).
In Fig. 1.12 nothing has changed except the gain of the LNA, but note that with only 12dB gain, the noise figure is degraded by more than 3dB (from 4.5dB to 7.68dB).

The above examples have been computed using a simple, but very useful CAD program called SYSCALC (Arden Technologies Inc), but if you want to work it out the hard way it is necessary to use the expression for cascaded noise factor:

$$F = F1 + (F2-1)/G1 + (F3-1)/G1.G2 + (F4-1)/G1.G2.G3 + \ldots etc, \qquad \text{[Equ. 3]}$$

where F is the total noise factor, F1, F2..etc are the noise contributions of successive elements, and G1, G2..etc are the gain values of successive elements.

But **Take Care** - these are all ratios, *not* dB and each passive element must be treated as if it were an amplifier with a fractional gain.
See example.

Example:
Using the line-up in Fig.8, we have:
F1 = 2 the ratio of 3dB
F2 = 1.4 the ratio of 1.5dB
F3 = 15.8 the ratio of 12dB (the 3 passive elements in series)
F4 = 1.6 the ratio of 2dB
G1 = 0.5 for 3dB loss
G2 = 15.8 for 12dB gain
G3 = 0.063 for 12dB loss
Entering these figures in the expression for cascaded noise factor:
F = 2 + (1.4 -1)/0.5 +(15.8 -1)/0.5x15.8 + (1.6 - 1)/0.5x15.8x0.063
Hence, F = 2 + 0.8 + 1.87 + 1.2 = 5.87
To convert this back to a dB figure:
NF = 10 x log 5.87 = **7.68dB** * which agrees with the result in Fig.1.11.

At frequencies above about 3GHz, it is often not possible to obtain sufficient gain with a single LNA stage and two or more stages may be needed. To limit broadband response and to ease the blocking requirement, it is common practice to include a band-pass filter between the first and second stages, but it is important to keep the insertion loss of this filter as low as possible so that the first stage is still the dominant noise source (see Fig. 1.13 below).

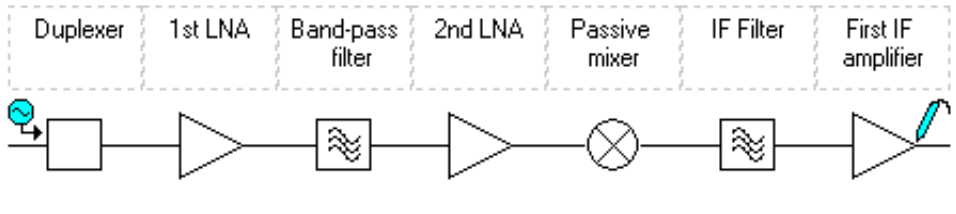

	Duplexer	1st LNA	Band-pass filter	2nd LNA	Passive mixer	IF Filter	First IF amplifier	Cascade Total
NF (dB)	3	1.5	3	1.5	6	3	2	5.09
Gain (dB)	-3	12	-3	12	-6	-3	26	35.00
OIP3 (dBm)	100	25	100	25	20	100	20	19.95

Fig. 1.13. Gain budget diagram showing overall noise figure for 2-stage LNA of **5. 09dB**.

In the above example, the first LNA has a gain of 12dB, followed by a filter with 3dB insertion loss and then a second LNA stage. The overall gain is therefore (12 - 3) + 12 = 21dB. Note that the noise figure is still dominated by the first stage alone, subsequent stages adding only 0.59dB.
This configuration would be used where the gain of a single device is inadequate.

FAQ 2. How much gain do I need in my LNA?

Remember, in order to minimize the effect of noise in later stages, the overall gain (including the insertion loss at the input) should exceed about 15dB, although this can be less if the device is followed by an active mixer (i.e. having positive gain rather than a 6dB insertion loss). If it is not possible to get sufficient gain from a single stage, you may need a second LNA stage.

1.3.2. Optimum Noise match.

For minimum noise figure, the LNA device should be matched for its optimum noise impedance rather than the system input impedance (usually 50 Ohms). These are NOT the same, although for the best devices they are fairly close and, through the careful use of feedback it is possible to make them even closer. In reality, the difference in the overall noise figure is likely to be quite small and, for many applications, it is probably better to settle for a slightly higher noise figure in order to present a good return loss at the input. Moreover, the condition for minimum noise is frequently not compatible with a good stability factor, especially at frequencies outside the pass-band and the designer needs to ensure that the LNA does not become an oscillator (see section 1.4.3).

In the noise figure plot shown in Fig. 1.10, it may be seen that for the Infineon BFP420 device, the difference between the noise figure for a 50Ω match and the noise match (Zs_{opt}) is less than 0.2dB. Where a duplexer with a typical insertion loss of 3dB precedes the LNA, there is very little benefit to be gained from saving just 0.2dB in a 4.5dB overall noise figure. If, on the other hand, the specification demands a noise figure of better than 1.5dB say, as might be required for a base-station with a low-loss, high 'Q' input filter, then even 0.2dB is significant. For such a demanding application, however, a balanced LNA can give real benefits (see Fig. 1.22), as will be discussed in section 1.4.6.

FAQ 3. How can I decide what is an acceptable noise figure for the active device in my LNA?

The system specification will usually require a minimum sensitivity for a fixed bit-error rate (BER), or a Sinad figure for an analogue system. Using the relationships given in section 1.1, determine the maximum *system* noise figure that will meet this requirement. Now take the worst-case figure for insertion loss of any circuit elements *before* the LNA (duplexers, filters, PIN switches, etc) and subtract this from your maximum system noise figure. It is assumed that your LNA will have sufficient gain to make it the dominant noise source and, to allow for some contribution from later stages, subtract a further 1dB. The resultant figure is the maximum noise figure that is acceptable for the active device.

Example: A receiver requires a minimum sensitivity of -105dBm for a 0.02% BER and a C/N of 9dB at the demodulator to achieve this result. From the figures in section 1.1, we see that the maximum system noise must be less than 7dB. If the worst-case insertion loss for the duplexer is 3dB and we allow a further 1dB for noise contribution in later stages, the maximum LNA device noise figure must be less than 3dB. To allow for tolerances and some degradation at elevated temperatures, we would choose a device with a noise figure better than 2dB.

FAQ 4. Do I need to match my LNA for optimum noise?

If the insertion loss of any input filters or switching circuits exceeds 3dB, then it is probably not worthwhile to match for optimum noise. It is assumed that the system impedance is 50Ω and, unless the optimum noise match is already close to 50Ω, a mismatch will result in poor return loss and can lead to instability. For a high-quality system where the input losses are less than 1dB, a noise match can be worthwhile. For the best possible performance and where cost and size are unimportant, the balanced LNA configuration described in section 1.4.6. should be considered.

1.4.3. Stability Factor.

Ideally, your LNA should be unconditionally stable - that is, it will not become unstable with any combination of impedances at the input and output. This condition should be checked over a wide frequency range and well beyond the frequency of operation of the LNA. It is quite common for an LNA design to appear stable at the operating frequency, but to become unstable (and oscillate) at a frequency in the high GHz range. There are several methods of measurement for stability, but one of most common is given by the 'Rollett Stability Factor', designated K, and this must always be greater than unity for an unconditionally stable design. Its value is given by:

$$K = (1 + [S_{11}.S_{12} - S_{21}.S_{12}]^2 - S_{11}^2 - S_{12}^2)/2.S_{11}.S_{12}\ * \qquad \text{[Equ. 4]}$$

But don't worry, we shall not even attempt to work this out numerically. Here is one case where CAD is more or less essential. Provided that you have modeled your LNA correctly, you can plot the K factor across a wide range of frequencies and check that it remains greater than unity. As a rough guide, 0.8 - 1 is not ideal but you can probably live with it, anything less than 0.8 is likely to give an unstable design with reactive mismatch, and a negative value means guaranteed oscillation!

Whilst on the CAD, this will be a good opportunity to observe the effect of a small value resistor in series with the output and of a small emitter/source inductor/microstripline (see Figs 1.18 and 1.22). The effect of the series resistor (typically 10 -22Ω) is to improve the stability factor with only a small loss of gain in band. A similar effect can be achieved by a resistor across the output shunt inductor; in this case typically 220 - 680Ω.

Fig. 1.14.
The two plots shown are for an actual LNA using the Agilent ATF34143 PHEMT device, with $V_{d\text{-}s}$ = 3V and I_d = 40mA

K factor and gain versus series resistor for values of 0, 10 and 22Ω ,with 2 x 2mm microstrip-lines in the source leads.
At least 15Ω is needed to bring the K factor to greater than unity in the passband.

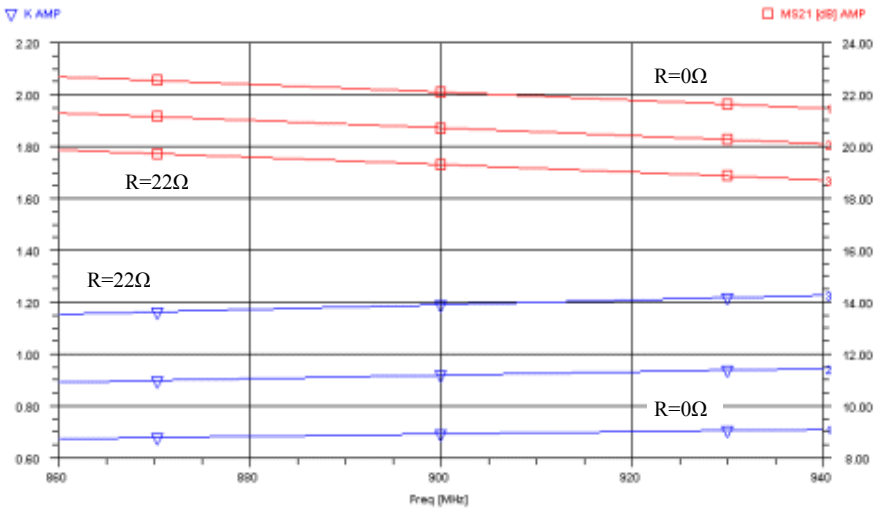

Return loss versus series resistor for values of 0, 10 and 22Ω , with 2mm microstriplines.
Note that 22Ω is necessary to achieve the desired 10dB input return loss.

The microstriplines in the source (two of them in parallel) are essential (see next page).

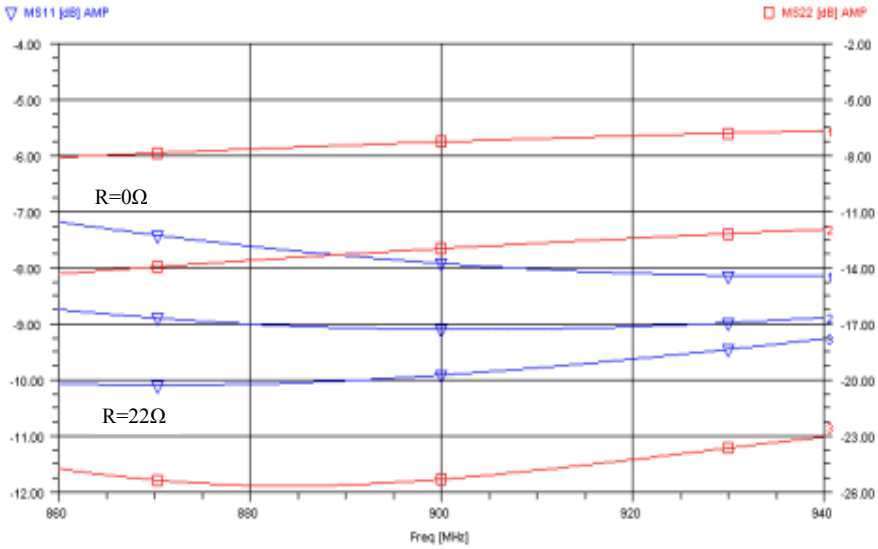

Similarly, the source/emitter inductor not only improves K, but can also rotate S_{11} closer to Z_{opt}. The effect of the latter is to improve both the noise figure and the input return loss, with only a small loss in gain. For the example using the ATF34143 on the previous page, the inductance is formed by two microstriplines just 1mm wide and 2mm long representing less than 0.5nH of inductance, and is more or less mandatory in this design. But **be careful**, too much inductance here will have the reverse effect and can actually cause instability (see Figs 1.15 and 1.16).
Note that the dimensions given for the microstriplines assume a board thickness of 0.51mm. For thicker board, the ground via inductance will be significant and the lines should be modified or omitted.

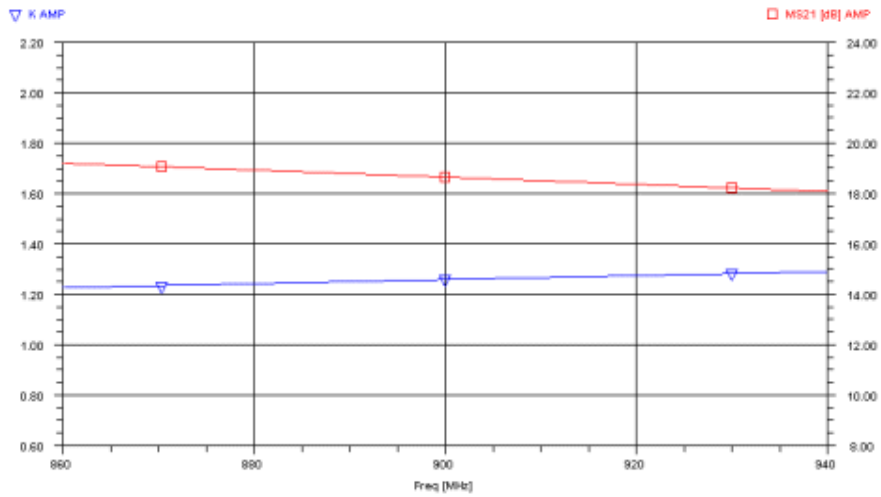

Fig. 1.15.
K factor and gain with a 22Ω series resistor and 3mm microstriplines in the source.
Note that the stability factor seems to be further improved, with only a small loss of gain.
But - see Fig. 1.16.

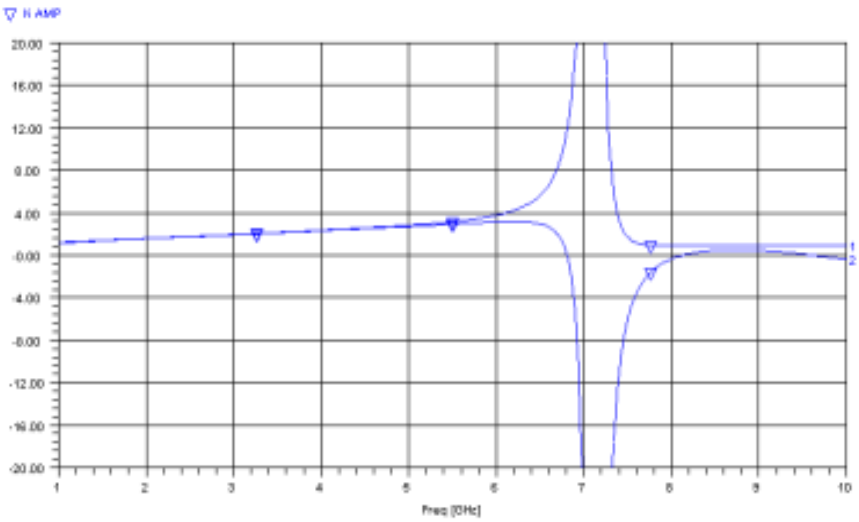

Fig. 1.16.
Effect on K at high out-of-band frequencies when line lengths are increased from 2 to 3mm.
Note that the K factor changes abruptly from unconditionally stable to a large negative value (and certain oscillation) at 7GHz.

Another factor affecting the stability factor is the proper decoupling of the bias supply and the output load. It is not sufficient to decouple these points at the LNA operating frequency; they must also be decoupled for much lower frequencies to limit the LF response. It can be shown that the presence of large signals can cause inter-modulation products at low frequencies that modulate the bias supply, causing degradation in both the noise figure and the IP3 (more on this in section 1.4.4).

Useful Tip 1: If the measured gain of your completed LNA is much lower than predicted, it is probably oscillating. Instability can often occur at very high frequencies and may not be seen on a spectrum analyzer unless it is extended to its maximum range (you need at least a 10GHz spectrum analyzer). Another clue is if the bias conditions are all wrong. Carefully probe the decoupling nodes, whilst watching the output, to discover if any of them is 'live'.
Review your layout and decide if additional decoupling or grounding is required. If you have used CAD for your design, check the stability factor over a wide band, well beyond your frequency of operation. But first make sure your imported S-parameters extend to the maximum frequency of your scan, as no CAD program can predict what will happen at frequencies for which it has no data.

1.4.4. Third-order Intercept Point. (IP3)

In section 1.1, it was shown that receiver sensitivity is determined by the noise floor and the overall noise figure. Another factor that can affect receiver sensitivity is intermodulation distortion (IMD). IMD is produced when there are two or more strong interfering signals at the input of a non-linear device. The action is similar to that of a mixer and produces outputs that have the relationship $(2f_1 - f_2)$, $(2f_2 - f_1)$, etc. For **HF receivers**, IP3 is much more important than the noise figure. These are third-order products; that is for every 1dB increase in the input level the IMD output level increases by 3dB, and the greater the number of frequencies, the greater the number of third-order products. If there is a large number of interferers, the integrated effect will raise the noise floor of the receiver with a consequent loss of sensitivity. This is especially important in CDMA applications, where there can be a large number of signals present simultaneously in the input pass-band.

The Third-order Intercept Point, IP3, is used as a convenient measure of the linearity of an amplifier stage (or stages) and hence the occurrence of intermodulation products. Note that the actual IP3 value is a theoretical concept only, since the amplifier response goes into compression well before it can reach IP3 (see Fig. 1.17). The example below shows how important it can be to have a high IP3 in any environment where large interfering signals may be encountered.

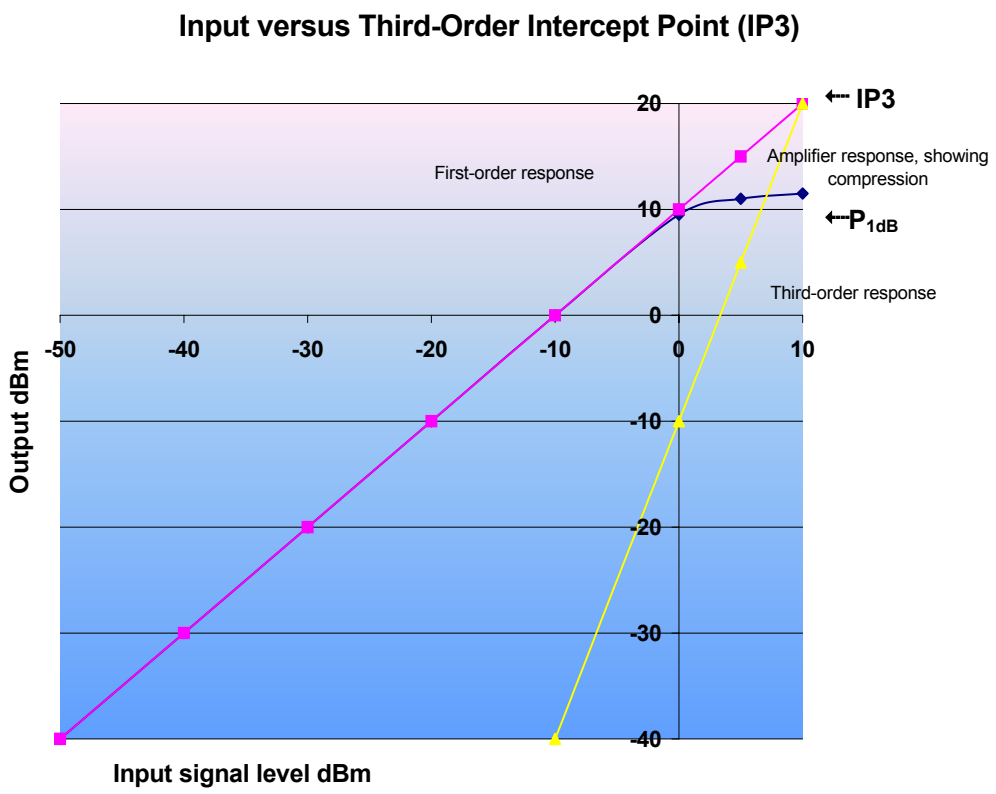

Fig. 1.17.
Plot of input power versus output power for an amplifier with 10dB gain, showing the third-order product (yellow trace) and its intercept with the extended first-order plot (violet trace).

Example: A receiver has a wanted input signal level of -50dBm at a frequency of 450MHz.
The IP3 of the amplifier is +20dBm and its gain is 10dB (see Fig. 1.16).
There are two interferers present, f_1 = 446MHz and f_2 = 448MHz.
$(2f_2 - f_1)$ gives (896 - 446) = 450MHz (the same as the wanted frequency).
In this example, the level of the wanted signal will be -40dBm at the output of the amplifier and it may be seen that the same level will be produced (and the receiver blocked) if the two interferers each has a level of -10dBm.
By further inspection, it is apparent that interferers even at -30dBm level will block a wanted signal at -110dBm, still within the expected range of sensitivity for many receivers.

The point at which the output is compressed by 1dB (i.e. amplifier gain falls by 1dB) is known as '**P_{1dB}**' and, as a rule-of-thumb, IP3 is P_{1dB}+10dB.

IP3 is normally given as a figure for the output of an amplifier (OIP3). The input IP3 (IIP3) will be OIP3 minus the gain of the amplifier. The IP3 can often be improved by a deliberate mismatch at the device output (load-pull), but this can only be determined experimentally and must be offset against poor output return loss.

It is important to maintain a good IP3 up to, and including the mixer; large offset signals beyond that point will be removed by the IF filter. With the advent of CDMA systems, it has become a challenge to the designer to design a front-end with the highest possible IP3 without consuming a prohibitively large amount of dc power.

Useful Tip 2: As a rough approximation, the IP3 of an amplifier stage may be predicted by multiplying the dc input power by 5 and converting to an equivalent dBm figure.

Example: An LNA has Vc-e = 4V and Ic = 10mA, so dc input power is 40mW.
Multiply by 5 to get 200mW and convert this to dBm.
IP3 = 10 x log 200 = **23dBm**. (This is the output IP3. For input IP3, subtract the stage gain).

1.4.5. Band-Pass Filters.

Although the LNA will have some selectivity, it will still have significant gain at frequencies well outside the pass-band. It is therefore usual to follow the LNA by a good band-pass filter to prevent these out of band signals from reaching the mixer, where their effect could seriously degrade the IMD performance of the receiver.
The band-pass filter is normally either a dielectric resonator type or a helical resonator type, as already described in sections 1.3.2 and 1.3.3. Ideally, it should be just wide enough to encompass the pass-band, with a steep roll-off on either side to give maximum out-of-band rejection. As long as the LNA has adequate gain, an insertion loss of 3 - 4dB is not a problem.
Occasionally, an L-C filter or a microstripline filter will be used instead, but both of these have their limitations. Due to the low associated Q of both the inductors and the capacitors, an L-C filter would not normally be considered at frequencies above 500MHz. Even at lower frequencies, the tolerances on the inductors and capacitors makes the response unpredictable unless adjustable inductors are used, and these are expensive and time-consuming to set up.
Microstripline filters are a possibility at higher frequencies, but these too are unpredictable unless constructed on a stable, low loss substrate, such as alumina. Fig. 1.18 below shows the construction of a typical edge-coupled filter with a 200MHz wide pass-band, centered on 4.4GHz.

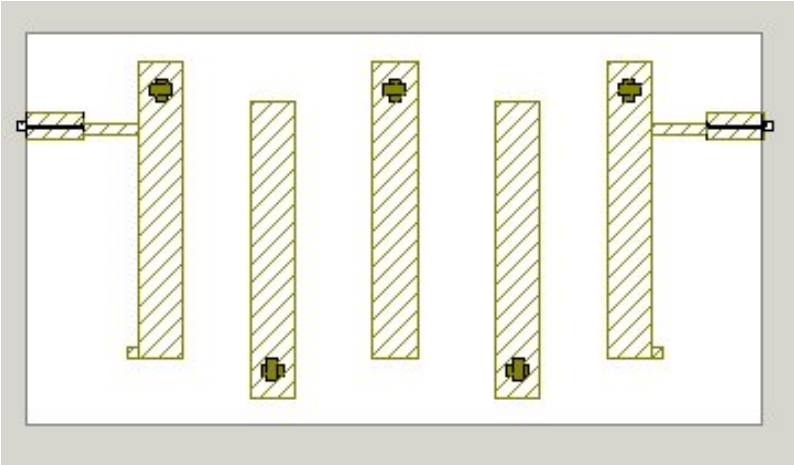

Fig. 1.18.
A microstripline filter for 4.4GHz, constructed on an alumina substrate. The insertion loss in the pass-band is less than 2dB and the rejection is typically 20dB at 300MHz offset

1.4.6. A Practical LNA.

Although it is possible to design an LNA without the use of CAD, there is no doubt that the task is made much easier with a good simulation program such as 'Microwave Office', 'Serenade', 'ADS' or 'Libra'. Even some of the older programs, such as 'Super Compact' or 'Touchstone' can be used with good results. The free 'Appcad' program is better than nothing, but is not recommended.

Fig. 1.19. Schematic and gain plot for a 900MHz LNA.

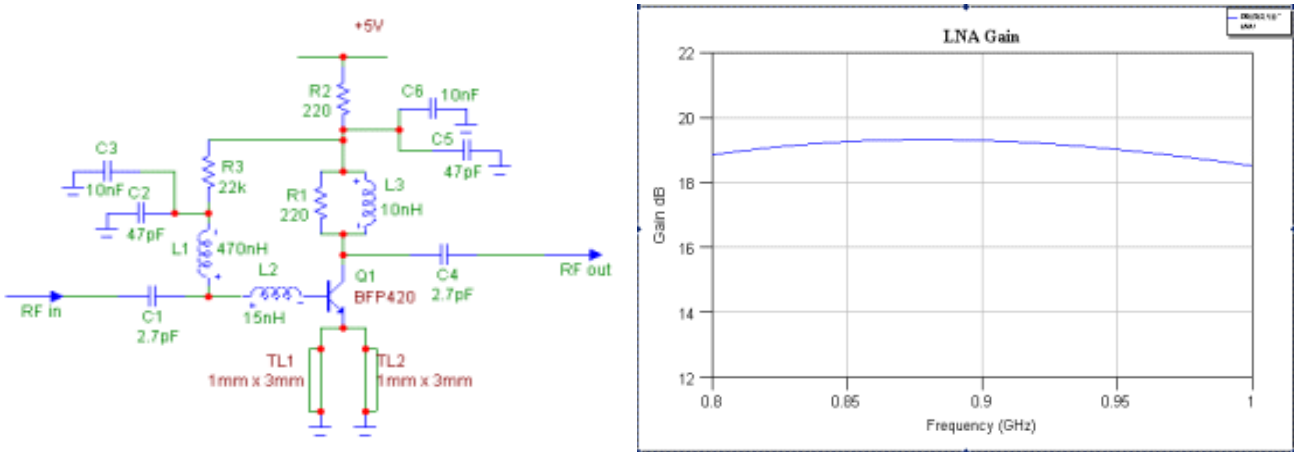

Fig. 1.20. Return loss and Noise Figure plots for the above LNA.

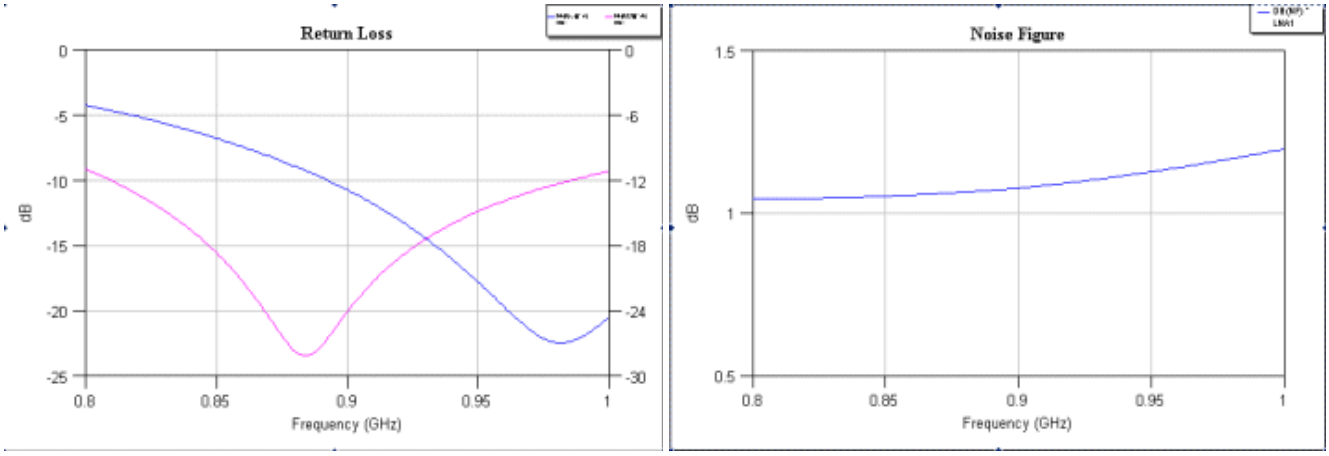

Fig. 1.21. Stability Factor (K) for the above LNA..

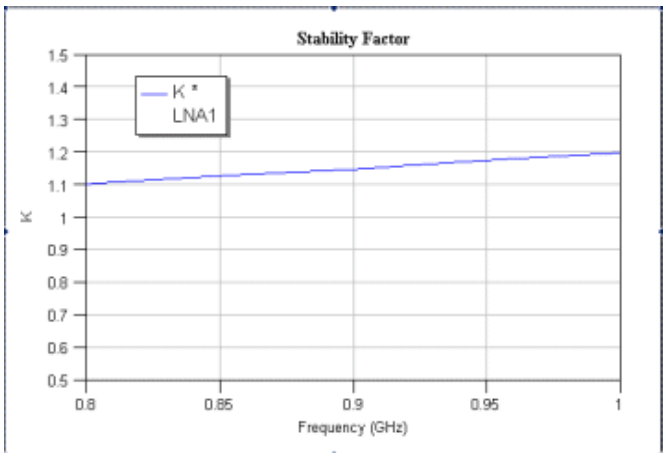

Figs 1.19 and 1.20 above show a practical design for a 900MHz LNA, using the Infineon BFP420, and Fig.1.21 shows its Stability Factor. The active device is biased at 3V and 5mA, which is the point corresponding to its minimum noise figure. Note that this device requires an output shunt resistor and emitter microstriplines (there are two in parallel because this device has two emitter tabs) to give a stability factor greater than unity in the pass-band. A shunt resistor was found to give better results than a series resistor for this design. The gain at mid-band is 19.3dB.

It may be seen that the input return loss is offset and only just meets the 10dB in-band target . This compromise is necessary to achieve the best noise figure of about 1.1dB.

1.4.7. Balanced LNA.

The balanced LNA, as the name implies, has two parallel paths for amplification and uses Wilkinson splitters/combiners or hybrid couplers to split and then re-combine the RF signal.
A typical circuit is shown in Fig. 1.22 on the following page. The addition of the two quarter-wave transmission lines gives the balanced configuration special properties, as will be described.

The operation of the balanced amplifier is frequently misunderstood. The input splitter, by definition, must give a 3dB insertion loss at the input of each amplifier. As with the single LNA, insertion losses at the input directly add to the noise figure and cannot be recovered. It might therefore be assumed that the balanced LNA will have a noise figure that is at least 3dB worse than the single LNA but, in fact, this is not so. The secret lies in the **balanced** configuration.

By re-combining the outputs of the two amplifiers, the wanted RF signals are in phase and therefore add **coherently** to recover the 3dB loss at the input. But, the noise component is essentially **non-coherent** and therefore does **not** add at the output. We therefore have the same overall gain and noise figure as might be achieved with a single LNA. What then, is the point of it all?

First, the IP3 of the balanced amplifier is improved by a factor of 3dB – this can be important in the design of a base-station.

Second, and perhaps more importantly, it may be shown that the inclusion of the λ/4 lines in alternate branches of the balanced pair, effectively cancels the return loss at both input and output ports. This means that the LNA devices can be matched for optimum noise (Zs_{opt}) to obtain the best possible noise figure without the need to worry about poor return loss. In the example shown in Fig. 1.22, a return loss of better than 24dB (1.01:1 VSWR) was measured at both ports - almost a perfect match.

The explanation for this is as follows:
Consider an RF signal present at the input port. This is split equally to feed the two LNA stages but, due to the mismatch at the LNA device, a reflected signal (return loss) is returned to the input with a 180° phase-shift. But, for the path with the λ/4 line, the input signal is phase-shifted by 90° when it reaches the LNA and the reflected signal is phase-shifted by a further 90° on its return, making a full 360°. Thus, the reflected signals from the two paths are in anti-phase and cancel one another.
A similar effect occurs at the output port.
Note that it is important that the **difference** in path length is 90° for the two LNA stages, if the optimum performance is to be realized. This means that the finite path length on the non phase-shifted side must also be added to the 90° phase-shifted side to maintain the 90° relationship.

Advantages of the balanced LNA are as follows:
- 3dB improvement in IP3.
- May be matched for optimum noise to give improved noise figure.
- λ/4 lines give excellent VSWR at both input and output ports.
- Very stable design.
- Continues working even if one amplifier fails, although with 6dB loss in gain and 3dB increase in noise figure. This can be important where extremely reliable operation is required.

Disadvantages of the balanced LNA are:
- Twice as many components, therefore higher cost.
- Requires much greater board area, especially for Wilkinson couplers and λ/4 lines.
- Twice the power consumption

Fig. 1.22. Schematic of a typical Balanced LNA design for 900MHz

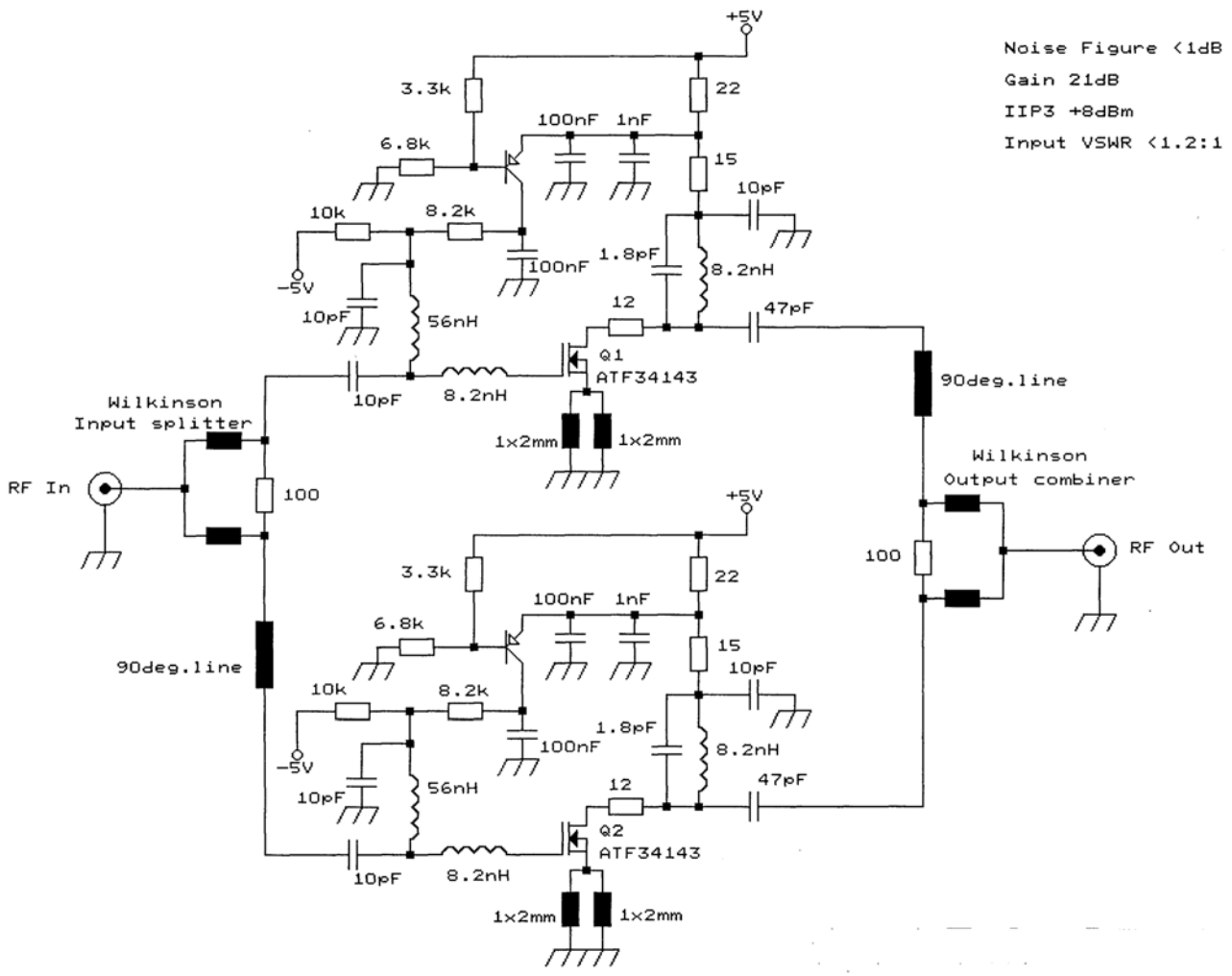

The circuit in Fig.1.22 shows a design using Agilent ATF34143 PHEMT devices. For optimum noise and good IP3, both devices are operated at a current of 40mA (80mA total from the supply). Active biasing is used here because it is important to ensure that the current in the two halves is the same. The gate voltages need to be negative with respect to source and the bias networks are therefore returned to a –5V supply. The purpose of the two microstriplines in each of the source connections has already been described in section 1.4.3. Note that the dimensions of the lines are determined by the board thickness, in this case 0.51mm (one layer of a multi-layer board). For a thicker board, the inductance of the ground vias will increase the effective inductance and the lines should be shortened, or possibly omitted entirely. The series 12Ω resistors are also necessary with this device, in order to achieve a good Stability Factor.

The plots shown in Figs 1.14, 1.15 and 1.16, section 1.4.3 are for the same device (ATF34143) used as a single LNA. It will be seen that the input return loss was only just meeting the 10dB requirement. With the balanced LNA design, figures of 26dB and 31dB were measured for input and output return loss, respectively.

At 900MHz, the losses associated with the microstripline Wilkinson splitters/combiners on FR4 board are quite small. However, at 1,800MHz the use of a discrete hybrid coupler will give lower loss than the on-board Wilkinson and hence a benefit in noise figure.

1.5. Bias circuits, decoupling and layout.

1.5.1. Simple bias circuit.

Above about 500MHz it really is not a good idea to use emitter bias stabilization, as is conventional at lower frequencies. It has been shown in section 1.4.3 that some emitter inductance is desirable for LNA applications, but it is difficult to control the inductance of discrete components and it is far better to ground the emitter, either directly or via a microstripline of defined length. This means that other methods of bias stabilization must be found.

The simple bias arrangement shown in Fig. 1.23 works quite well, provided that there is an adequate differential between the supply voltage and the required collector voltage on the transistor. If the value of resistor R1 becomes too low, then the dc negative feedback will no longer be able to control the working point of the transistor. With the values shown, this circuit gives acceptable performance over temperature and has the merit of extreme simplicity and virtually zero cost.

Fig. 1.23.
Simple bias circuit for Vc = 3V and Ic =5mA from a 5V supply. Transistor h_{fe} is assumed to be approximately 100.

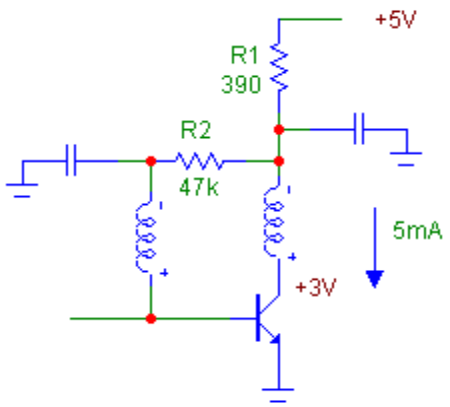

1.5.2. Active bias circuits

The active bias circuit shown in Fig. 1.24 gives excellent control of the transistor working point over extreme variations in temperature and transistor h_{fe} and, with the addition of a diode (Fig. 1.25) will work effectively with as little as 0.5V differential between supply voltage and the desired collector voltage. In this circuit, the PNP control transistor Q1 behaves as a voltage reference source, where its emitter voltage is determined by the ratio of R2 and R3 and is given by:

$$Ve = Vs[R3/(R2 + R3)] + 0.7 \text{ where Vs is the supply voltage.} \qquad \text{[Equ. 5]}$$

The 0.7V must be added on to take account of Vb-e.
It may be seen that the entire circuit acts as a constant current regulator, with the RF transistor current being set by the value of resistor R1 and given by:
Ic = (Vs -Ve)/R1

Fig. 1.24.
Active bias circuit for Vc = 3V and Ic =5mA from a 5V supply.
In this example Ve is 2.95V, hence
Ic = (5 -2.95)/0.39 = 5.25mA.

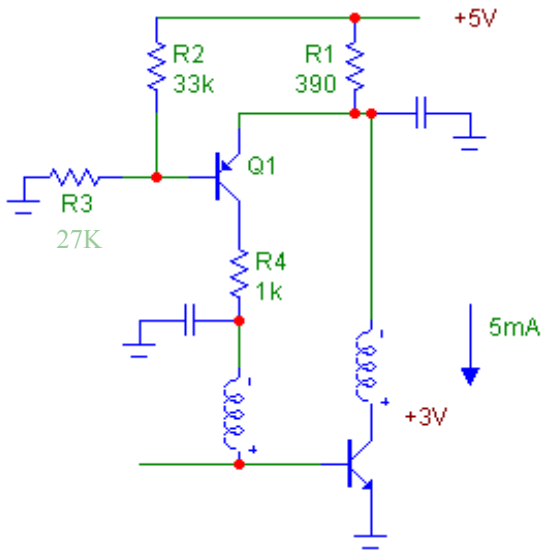

Note that resistor R4 is included only to allow proper decoupling of the bias supply and, provided that its value is low, it will not affect the bias conditions.

Figures 1.25 and 1.26 below show variations on the basic circuit for active bias.
In order to operate the RF transistor at a higher voltage, the voltage drop across R1 can become quite small. The Vb-e of transistor Q1 changes at a rate of approximately 2mV/°C over temperature and, for 50°C change in temperature this amounts to 100mV. If the voltage drop across R1 is only 0.5V, this represents a 20% change in voltage and hence in transistor current (bad). In Fig. 1.24 a diode is added in series with R2. As the diode voltage drop is also temperature dependent, this acts in the same direction as the Vb-e drop and compensates for it, greatly reducing the effects of temperature. The circuit of Fig. 1.26. shows a further improvement. Here, a dual 'current mirror' transistor is used (Philips BCV62) and, because the two halves are perfectly matched, the temperature tracking is very good. Note that in both cases, the value of R2 must be adjusted to allow for the additional 0.7V drop.

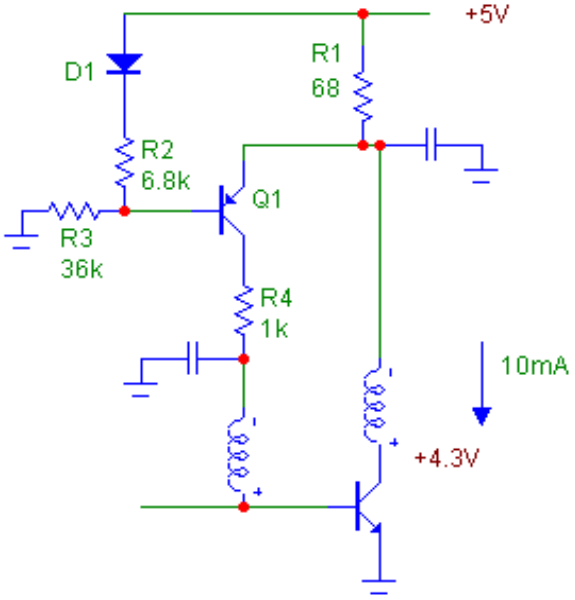

Fig. 1.25. Active bias with temperature compensating diode.

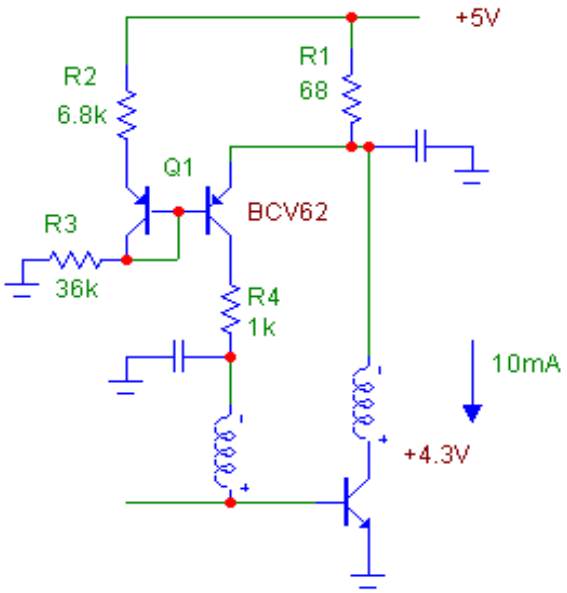

Fig. 1.26. Active bias with current mirror transistor.

Where it is important to precisely define the operating conditions of a transistor (or FET), active biasing is essential. For a PHEMT device, an additional resistor would be included from the junction of R4 and the bias inductor to a negative supply (as shown in Fig. 1.22), thereby allowing the device gate to operate with a negative voltage.

The main disadvantages of active biasing are the additional board space required and increased cost.

1.5.3. Decoupling and layout.

All discrete components have an associated series inductance and a shunt capacitance. At frequencies below about 200MHz, these are relatively insignificant and can be ignored, but at higher frequencies they must be accounted for. For optimum RF decoupling, a capacitor value should be chosen such that it is self-resonant at the frequency of interest (i.e. its series inductance is exactly cancelled by its capacitance value to give a virtual short-circuit). Generally speaking, wire-ended capacitors are not suitable for frequencies above 200MHz, because the associated lead inductance is too high. A typical 0603 SMD chip capacitor has a series inductance value of approximately 0.7nH.

Using the expression for resonance, $C = 1/w^2L$, with L = 0.7nH we find that:

220pF is the nearest standard value for self-resonance at 440MHz.
47pF is the nearest standard value for self-resonance at 900MHz.
10pF is the nearest standard value for self-resonance at 1,800MHz.

Also, it is not generally understood that the effective value of a capacitor increases with frequency. This is because the inductive reactance (vector j+) appears in series with the capacitive reactance (vector j-) to give a modified value. For example, a 10pF capacitor has a nominal reactance of -j16Ω at a frequency of 1GHz. If its lead inductance is 1nH, this represents a nominal reactance of +j6Ω. By vector addition, the actual reactance is 6 + (-16) = -j10Ω ....equivalent to a 16pF capacitor! Thus, the 10pF capacitor is effectively 'changed' to 16pF at 1GHz. Note that at 2GHz, this same capacitor will cease to be a capacitor at all: 12 + (-8) = +j4Ω ....which is entirely inductive.

At higher frequencies, it becomes increasingly important to ensure good grounding of and around the active device. Ground 'vias' need to be as close as possible to the components they are grounding and it should always be remembered that even a via has a series inductance value of (typically) 0.1nH. This can be significant at frequencies above 1GHz and multiple vias are often needed to reduce the impedance.

Useful Tip 3: Avoid the use of unnecessary ground plane on the top (active) layer of the pcb. Unless this is specifically required as part of a coplanar transmission line, it only increases the probability of unwanted signals being coupled from other parts of the circuit. All ground connections should take the shortest route to the internal (or bottom layer) ground plane using vias, or multiple vias.

Above 800MHz, the use of R-C emitter (or source) biasing should be strictly avoided. The associated parasitic inductance and capacitance of these components is virtually guaranteed to cause instability. Any un-decoupled emitter resistors will seriously degrade the noise figure.

Remember that **all** of the connecting tracks on your printed circuit board will act, to some degree, as microstrip transmission lines. Even a short length of track can significantly affect the impedance at the point to which it is connected. If in doubt, include all track lengths in your CAD model and only discard them if you are sure that their effect is negligible. All signal tracks that are not specifically part of a matching network or filter should be made 50Ω impedance.
Always try to keep your layout as compact as possible. A design that is unnecessarily spread out not only wastes board space, but is more likely to be unstable. At very high frequencies, even a solid ground plane cannot be relied upon to give zero impedance. If two ground vias are separated by a distance that is a significant fraction of a wavelength at signal frequency, then they can no longer be considered as a common point. If these are decoupling points for the same amplifier stage, then instability can occur.

When decoupling the power supply and bias feed points, it is not uncommon to see double or triple decoupling. This is necessary to limit the out-of-band gain of the stage, which may otherwise lead to instability and degrade the noise figure. For example, if the collector supply has a 220Ω resistor that is decoupled by a 47pF capacitor, this will be effective only at frequencies above 900MHz. At much lower frequencies, the 47pF will be high impedance and the collector load will now become the 220Ω resistor, possibly giving a substantial gain. A second, much larger value of capacitor (say 10nF) in parallel with the 47pF ensures that the decoupling remains effective. Frequently a third capacitor is added, which may be as high as 10µF and this, as well as limiting out of band gain down to very low frequencies, also removes 'common-mode' noise conducted by the power supply feed.

The use of metal 'screening' cans and covers should be used with care. Where these are considered necessary, they must be effectively grounded along the entire periphery. Failure to do so will not only render the can ineffective as a screen, but can actually cause it to act as an antenna and to radiate spurious signals to other equipment. At very high frequencies the dimensions may approach a quarter or half wavelength and the screening can become a resonant cavity. In such cases, the screening can may cause instability in, say, an amplifier stage by introducing feedback between output and input. One solution to this problem would be the inclusion of additional partitions inside the screening can.

1.6. Measurement Techniques.

Note that all of the following measurement techniques assume a working impedance of 50Ω. If this is not the case, it will be necessary to convert your impedance and make allowance for insertion losses.

1.6.1. LNA gain.

Method A:
The best way to measure LNA gain is with a Network Analyzer, especially since this instrument can also measure the input and output return losses at the same time.
The following procedure assumes the use of one of the HP/Agilent range of instruments.
It is first necessary to calibrate the instrument, including the connecting cables up to the point of connection to the LNA under test, and for the specific frequency range of interest. Select the '2-port' mode of operation and carry out the full calibration procedure - open, short, load for both ports and then connected together for transmission. Isolation can be omitted. **It is also important** to set the source power level; the default for most instruments is 0dBm and this is **too high**. If your LNA has a gain of 20dB, your amplifier may be driven into compression. Also, some older instruments will themselves go into compression at this level. A source power of **-20dBm** is recommended.
Connect your LNA to the network analyzer and, of course, to a suitable power supply. On the instrument display select your measurement to 'magnitude'. The default vertical scale is 10dB/div, but I recommend that you change this to 5dB/div. Select $\mathbf{S_{21}}$ to display your gain plot - you can use the markers to give an exact reading at any particular frequency. With the same set-up, simply select $\mathbf{S_{11}}$ and $\mathbf{S_{22}}$ to display your input and output return losses.

Method B:
You can measure gain using a Spectrum Analyzer and a Signal Generator. Set the signal generator frequency to the center of your frequency band and set the level to -20dBm. To 'calibrate out' the connecting cables, first connect them together between the signal generator and the spectrum analyzer and adjust the analyzer display so that this level is about half-way up the screen. Now set this point as your reference marker and switch to 'delta' marker. When you insert your LNA, this will give you a precise reading of your LNA gain at that frequency.
Repeat as necessary for other frequencies or, if preferred, select 'max.hold' on your display and simply sweep your signal generator across the frequency band of interest.

1.6.2. Return Loss.

If you have used Method A above to measure LNA gain, then return loss can be displayed on the same set-up by selecting $\mathbf{S_{11}}$ and $\mathbf{S_{22}}$.
If you do not have a Network Analyzer, it is rather more difficult and requires the use of a Directional Coupler, a Signal Generator and a Spectrum Analyzer. Set the signal generator output level to about -5dBm (or the highest level that you are sure will not drive your amplifier into compression) and connect its output to the directional coupler (in the forward direction). Connect the output of the directional coupler to the spectrum analyzer and set this level as your reference level. Select 'delta' marker. Now connect the reverse output from the directional coupler to the spectrum analyzer and the forward output to your LNA. You **must** load the output of your LNA with a 50Ω dummy load. The spectrum analyzer will display a reading for reflected power, but this is **not** the figure for input return loss; to obtain this you must add on the loss factor for the directional coupler. E.g. If the analyzer reading is -30dB and you are using a 20dB coupler, the return loss figure is (-30 + 20) = -10dB.
Similarly, to measure the output return loss, connect the directional coupler between the output of the LNA and the spectrum analyzer to set a reference level, then load the output of the directional coupler with a 50Ω dummy load and connect the reverse power output to the spectrum analyzer. The return loss will again be given by the difference in the two readings **plus** the loss factor of the coupler.

1.6.3. Noise Figure.

Method A:
The obvious and most efficient way to measure the noise figure of your LNA is with a Noise Meter. Again, HP/Agilent make a range of instruments, their latest offering being a highly sophisticated piece of equipment with a matching price-tag. When using a noise meter, always ensure that the noise source head is connected directly to the input of your LNA. Any intervening cable can give rise to inaccurate readings.

Method B:
If you do not have access to a Noise Meter, you will at the very least need a noise source. This should be a properly calibrated device with a known **ENR** figure (Equivalent Noise Ratio). A typical ENR figure would be in the range 10 - 15dB. You will also need a broadband amplifier module (such as those manufactured by Mini-Circuits) with a known gain and noise figure, and a Spectrum Analyzer.

Fig. 1.27.
Noise measurement set-up.

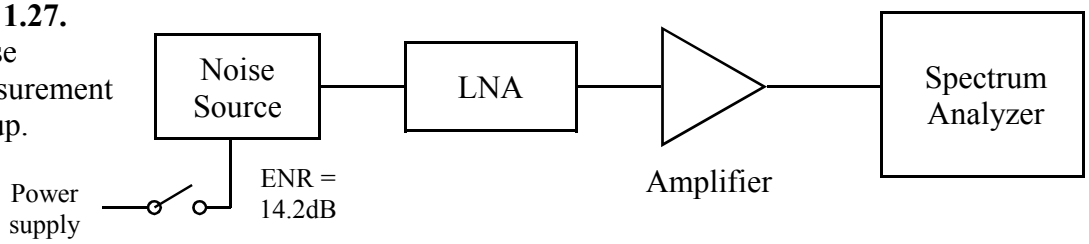

Using the set-up in Fig.1.27, set the spectrum analyzer to the center frequency of the LNA under test, with minimum bandwidth setting and the input attenuator at zero. Make sure that the displayed level is well above the noise floor of the analyzer itself by temporarily removing the input. Use trace averaging to give a steady display.
With the noise source switched off, measure the noise level. Now switch on the noise source and measure it again, giving it time to settle at the new average. The two readings taken will be in dBm and it is necessary to convert them to actual power levels, using the relationship $NT = 10^{(dBm/10)}$.

Example: Noise off reading = -122dBm, so $NT = 10^{(-122/10)} = 10^{-12.2}$ mW = 6.31×10^{-13} mW
Noise on reading = - 109dBm, so $NT^1 = 10^{(-109/10)} = 10^{-10.9}$ mW = 1.259×10^{-11} mW
Ratio NT^1/NT = **19.95**

This ratio is known as the **'Y' factor** and is the basis of all noise measurements.
We can now obtain the noise figure, using the following expression:

$$NF = ENR - 10 \times \log(Y - 1) \quad \text{where } Y = NT^1/NT \qquad \text{[Equ. 6]}$$

From the example then, we get NF = 14.2 - 10 x log(19.95 -1) = 14.2 -12.78 = **1.42dB**.

Note that we have taken no account of any noise contribution from the broadband amplifier. Provided that our LNA gain exceeds 15dB, we can ignore this. Otherwise it will be necessary to use the equation for cascaded noise figure (Equ. 3 on page 14).

This is the principle upon which noise figure meters are based, but I am sure you will agree that it is much easier to use a Noise Meter.

For system noise figure (i.e. the noise figure of a complete receiver chain), we use the much simpler method given by Equ.1 on page 5, but this will be fully discussed in Part 2, section 2.7.5 of this book.

1.6.4. IP3.

The IP3 of an amplifier is measured using the **two-tone** method. This requires a Spectrum Analyzer, two Signal Generators and a combiner (see Fig. 1.28 for set-up). Two frequencies are chosen with a convenient spacing, such that they are both within the amplifier pass-band and that the expected products are also within the pass-band. For example, if the pass-band is 880 - 900MHz, two suitable frequencies would be 889MHz and 891MHz, because their products (plus and minus the difference) at 887MHz and 893MHz are still within the pass-band.

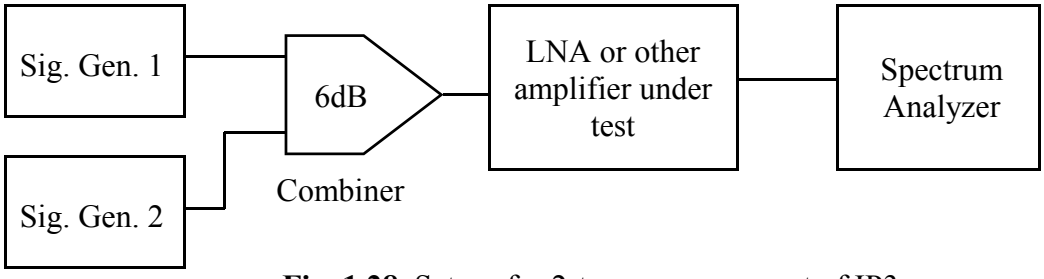

Fig. 1.28. Set-up for 2-tone measurement of IP3.

Using the above set-up, first set the two signal generators to the required frequencies and set their output levels to about - 20dBm and both the same. Connect the output from the combiner directly to the spectrum analyzer and adjust the display so that both signals are visible near the center of the screen and with an appropriate span, such that their products will also be on screen. Check that both signals are equal to within less than 0.5dB and, if not, adjust one of the signal generator outputs until they are equal.
Now connect in the amplifier and slowly increase the outputs from both signal generators together in exactly equal steps until the distortion products appear on either side of the two outputs. Adjust the vertical scale on the analyzer as necessary to avoid the display going off the top of the screen. Check the relative amplitudes of the main outputs and the distortion products and keep increasing the signal generator levels until there is a difference of as near as possible to **40dB**.
At this point, measure the precise amplitude of the main outputs; if they are not exactly the same check that you have increased both signal generators by the same amount.
Add 20dB to your figure to give the actual IP3 for your amplifier. The reason for this is that, if the output level increases by 20dB, the third-order product would increase by 60dB (i.e. 3 x 20).
As previously explained in section 1.3.4., this is a theoretical limit only and is used as a convenient figure of merit. In reality, the amplifier would go into hard saturation about 8dB lower than the IP3 figure (see P_{1dB}).
Example: measured output level for 40dB products is +12dBm, IP3 is therefore 12 + 20 = 32dBm.

Note that the input IP3 (IIP3) will be given by subtracting the amplifier gain from the above figure. If you try to correlate this figure with your measurements, remember that there is a 6dB insertion loss in the combiner.

1.6.5. P_{1dB}.

This is the easiest of all to measure, requiring only a Signal Generator and a Spectrum Analyzer. Connect the signal generator to the input of your amplifier and its output to the spectrum analyzer. Using an appropriate frequency in the pass-band, set the signal generator level to give an amplifier output of about -5dBm (it is assumed that your P_{1dB} will be significantly higher than this). Use peak search to set your reference marker on this output and then select 'delta' marker. Increase the output of the signal generator in 1dB steps, checking that each step of input gives a corresponding 1dB step in output. When this no longer happens, find the level at which the actual output is 1dB less than it should have been if it had continued to rise in 1dB steps - **this is your P_{1dB} figure**.